TLS6F
Standard Compressor
R134a
220-240V 50Hz

Data Sheet (Replaces CG.42.G1.02)

General

Compressor	**TLS6F**
Code number	102G4620

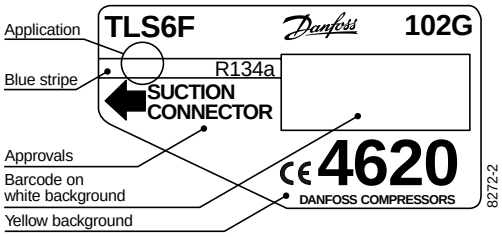

Application

Application		LBP
Evaporating temperature range	°C	-35 to -10
Voltage range	V/Hz	198 - 254 /50
Motor type		RSIR/CSIR
Max. ambient temperature	°C	38
Comp. cooling at ambient temp.	32°C	S
	38°C	S

S = Static cooling normally sufficient
O = Oil cooling
F_1 = Fan cooling 1.5 m/s (compressor compartment temperature equal to ambient temperature)
F_2 = Fan cooling 3.0 m/s necessary

Design

Displacement	cm^3	5.70
Oil quantity	cm^3	180
Maximum refrigerant charge	g	400
Free gas vol. in compressor	cm^3	1790
Weight without electrical equipment	kg	7.3

Motor

Motor size	watt	125
alternative motor		110
LRA (rated after 4 sec. UL984) LST/HST	A	4.7/5.8
alternative motor		4.3/5.1
Cut-in current LST/HST	A	8.7/5.8
alternative motor		8.6/5.1
Resistance, main and start winding (25°C)	Ω	16.0/17.0
alternative motor		18.2/15.1
Approvals		EN 60335-2-34 with Annex AA

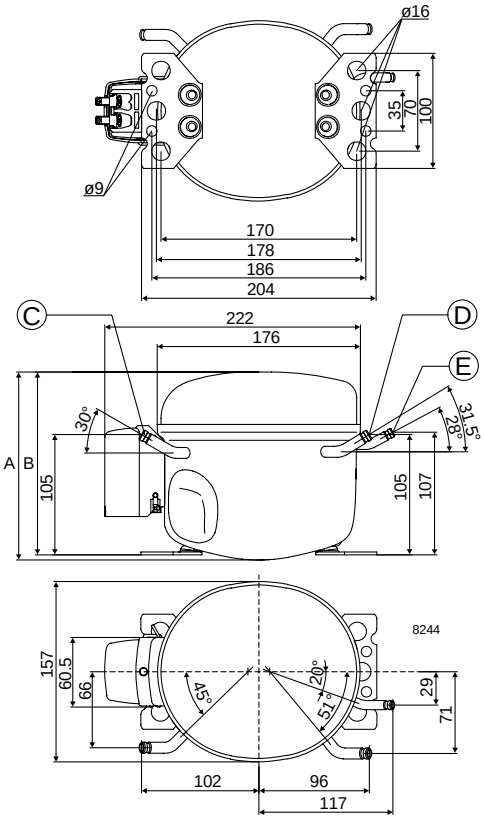

Dimensions

Height	mm	A	173
		B	169
Suction connector	location/I.D. mm	C	6.2 ±0.09
Process connector	location/I.D. mm	D	6.2 ±0.09
Discharge connector	location/I.D. mm	E	5.0 +0.12/+0.20
Compressors on a pallet	pcs.		125

Capacity (EN 12900/CECOMAF) watt

Comp.\°C	-35	-30	-25	-23.3	-20	-15	-10
TLS6F	58	77	104	115	139	183	235

Capacity (ASHRAE) watt

Comp.\°C	-35	-30	-25	-23.3	-20	-15	-10
TLS6F	71	95	128	142	172	226	290

Power consumption watt

Comp.\°C	-35	-30	-25	-23.3	-20	-15	-10
TLS6F	84	101	119	125	138	159	181

Current consumption A

Comp.\°C	-35	-30	-25	-23.3	-20	-15	-10
TLS6F	0.78	0.82	0.86	0.88	0.92	0.99	1.08

COP (EN 12900/CECOMAF) W/W

Comp.\°C	-35	-30	-25	-23.3	-20	-15	-10
TLS6F	0.69	0.76	0.87	0.92	1.01	1.15	1.30

COP (ASHRAE) W/W

Comp.\°C	-35	-30	-25	-23.3	-20	-15	-10
TLS6F	0.85	0.94	1.08	1.13	1.24	1.42	1.60

Test conditions	EN 12900/CECOMAF	ASHRAE
Condensing temperature	55°C	55°C
Ambient and suction gas temp.	32°C	32°C
Liquid temperature	55°C	32°C
Static cooling, 220V 50Hz, PTC consumption incl.		

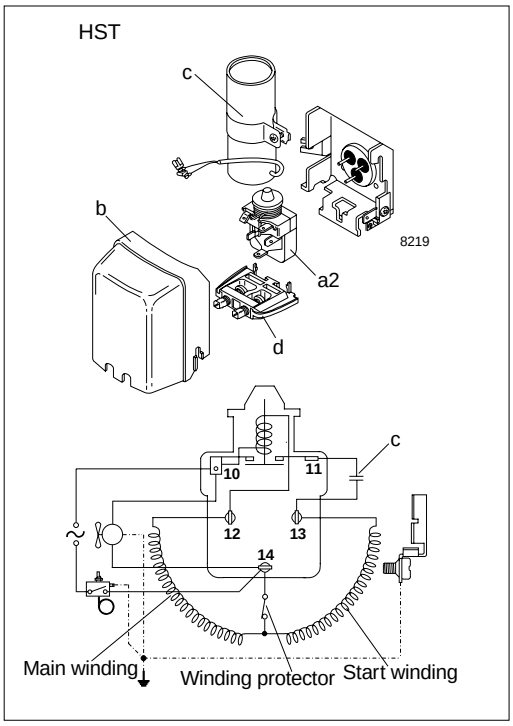

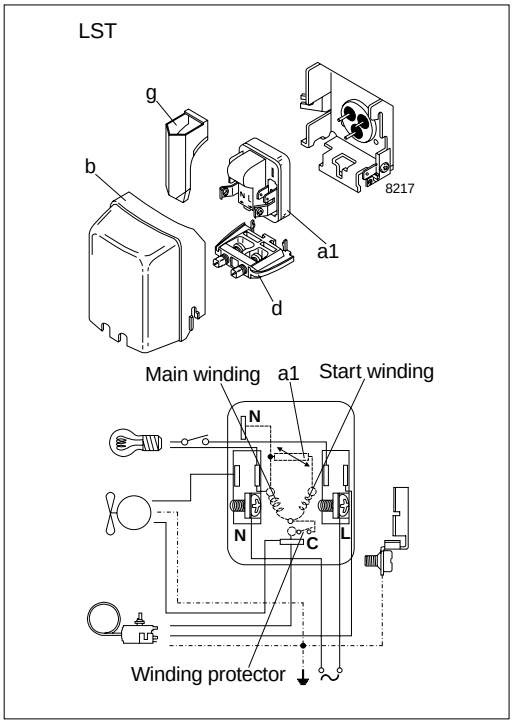

Accessories

Devices		Fig.	TLS6F
PTC starting device	6.3 mm spades 4.8 mm spades	a1	103N0011 103N0018
Starting relay		a2	117U6004
Cover		b	103N2010
Starting capacitor 60 µF		c	117U5014
Cord relief		d	103N1010
Protection screen for PTC		g	103N0476
Mounting accessories Bolt joint for one compressor Bolt joint in quantities Snap-on in quantities			 118-1917 118-1918 118-1919

Danfoss can accept no responsibility for possible errors in catalogues, brochures and other printed material. Danfoss reserves the right to alter its products without notice. This also applies to products already on order provided that such alterations can be made without subsequential changes being necessary in specifications already agreed.
All trademarks in this material are property of the respective companies. Danfoss and the Danfoss logotype are trademarks of Danfoss A/S. All rights reserved.