www.mbsm.pro , Some Funny Electric pictures part1

Category: Pictures
written by mahdi miled | 12 August 2018
www.mbsm.pro , Some Funny Electric pictures part1
mbsm-dot-pro-picture-electric -funny1.jpg (37 KB)
mbsm-dot-pro-picture-electric -funny1.jpg (47 KB)
mbsm-dot-pro-picture-electric -funny2.jpg (63 KB)
mbsm-dot-pro-picture-electric -funny2.jpg (73 KB)
mbsm-dot-pro-picture-electric -funny3.jpg (121 KB)
mbsm-dot-pro-picture-electric -funny3.jpg (124 KB)
mbsm-dot-pro-picture-electric -funny4.jpg (145 KB)
mbsm-dot-pro-picture-electric -funny4.jpg (133 KB)
mbsm-dot-pro-picture-electric -funny5.jpg (117 KB)
mbsm-dot-pro-picture-electric -funny5.jpg (129 KB)
mbsm-dot-pro-picture-electric -funny6.jpg (23 KB)
mbsm-dot-pro-picture-electric -funny6.jpg (27 KB)
mbsm-dot-pro-picture-electric -funny7.jpg (62 KB)
mbsm-dot-pro-picture-electric -funny7.jpg (72 KB)
mbsm-dot-pro-picture-electric -funny8.jpg (31 KB)
mbsm-dot-pro-picture-electric -funny8.jpg (33 KB)

---

www.mbsm.pro , Quelle est la

différence entre le SDS PLUS et le SDS MAX ?

Category: Technologie
written by mahdi miled | 12 August 2018
Lorsque vous choisissez un outil, vous aurez donc le choix entre la fixation par mandrin classique (avec ou sans clé de serrage) et par mandrin SDS avec les variantes SDS PLUS et SDS MAX.
Attention, vos accessoires classiques ne seront pas adaptés aux système SDS et inversement ! Le système SDS accueille en effet des mèches/forets avec cannelures qui s’encastrent dans le mandrin et permettent une fixation plus fiable que les forets classiques qui finissent par «glisser dans le mandrin», particulièrement lors de gros travaux (forage / percussion sur de la pierre)

Mbsm Pro , Images De Plage , Chebba , Mahdia , Tunisia , Août 2018

Category: Voyage
written by www.mbsm.pro | 12 August 2018
Mbsm Pro , Images De Plage , Chebba , Mahdia , Tunisia , Août 2018

Mbsm.pro , LM317 ,Voltage Regulator Pin Outs, Simple test, voltage regulators ics , Voltage regulator

Category: Développement,electronique
written by www.mbsm.pro | 12 August 2018
The LM317 is most commonly found in a TO220 package. It only has three pins and we will be using all of them in this tutorial.

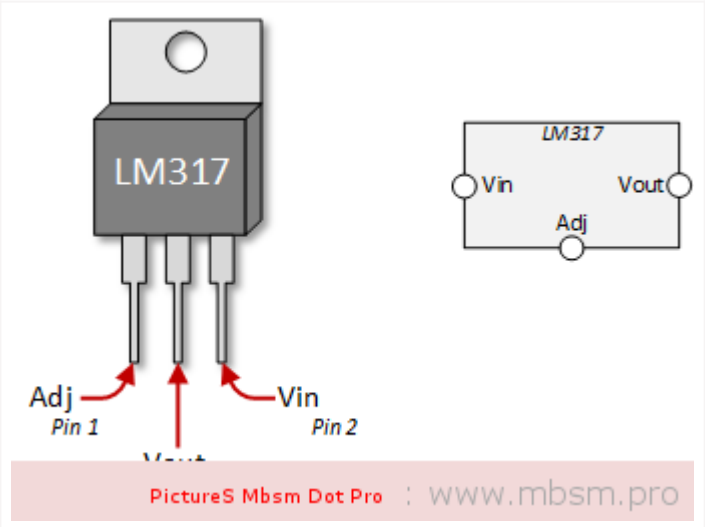

The LM317 Voltage Regulator for Current Control

The use of an LM317 as a constant current source comes right from the data sheet. The schematic below shows how to configure the LM317 as a current regulator. It is the value of R1 that you will be concerned about and that value is determined by the type of LED you are using.

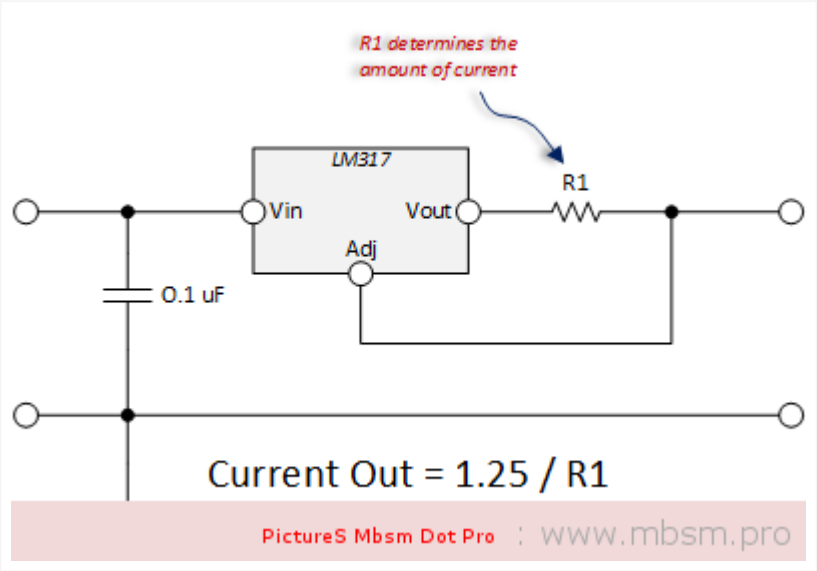

The math is really simple. The factor of 1.25 also comes from the data sheet. Let's walk through an example:

1. Lets say you wanted to control to 300 mA. You would determine that your optimum resistor is:
   R1 = 1.25 / 0.300 = 4.17 Ohms
2. Next you're going to poke around in your box of resistors to see what you've got. You probably won't find that 4.17 Ohm resistor, so you will want to try something close. I had a 4.7 Ohm resistor.
3. Now you're going to want to apply the formula to see what that gets you.
   Current Out = 1.25 / 4.7 = 266 mA.
4. Finally, we need to do a sanity check of the power rating of the resistor.

   Here we will use $\mathbf{I^2 \times R}$ to get the power dissipated by the resistor.

   Power Dissipated by Resistor = $0.266^2 \times 4.7$ = 0.332 Watts *(a half watt resistor will do the trick)*

LM317 Variable Voltage Regulator Circuit..

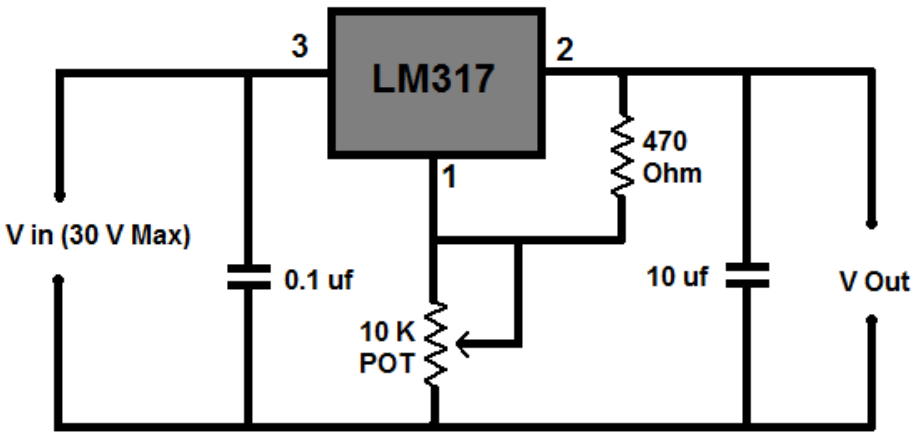

LM317
Pin Arrangement

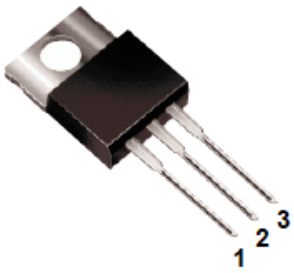

1. Adjust
2. V_{out}
3. V_{in}
Heatsink is connected to pin 2

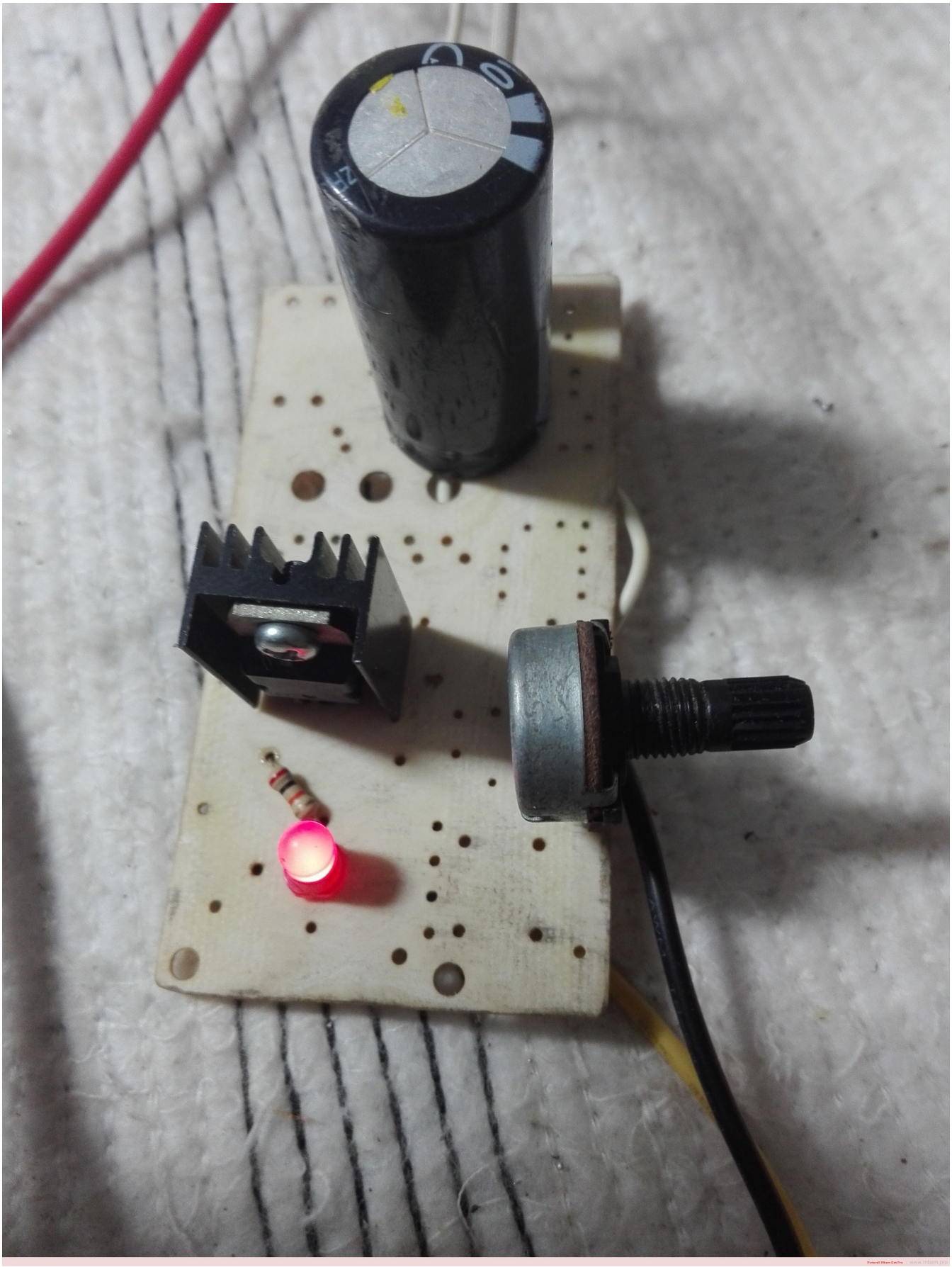
50V

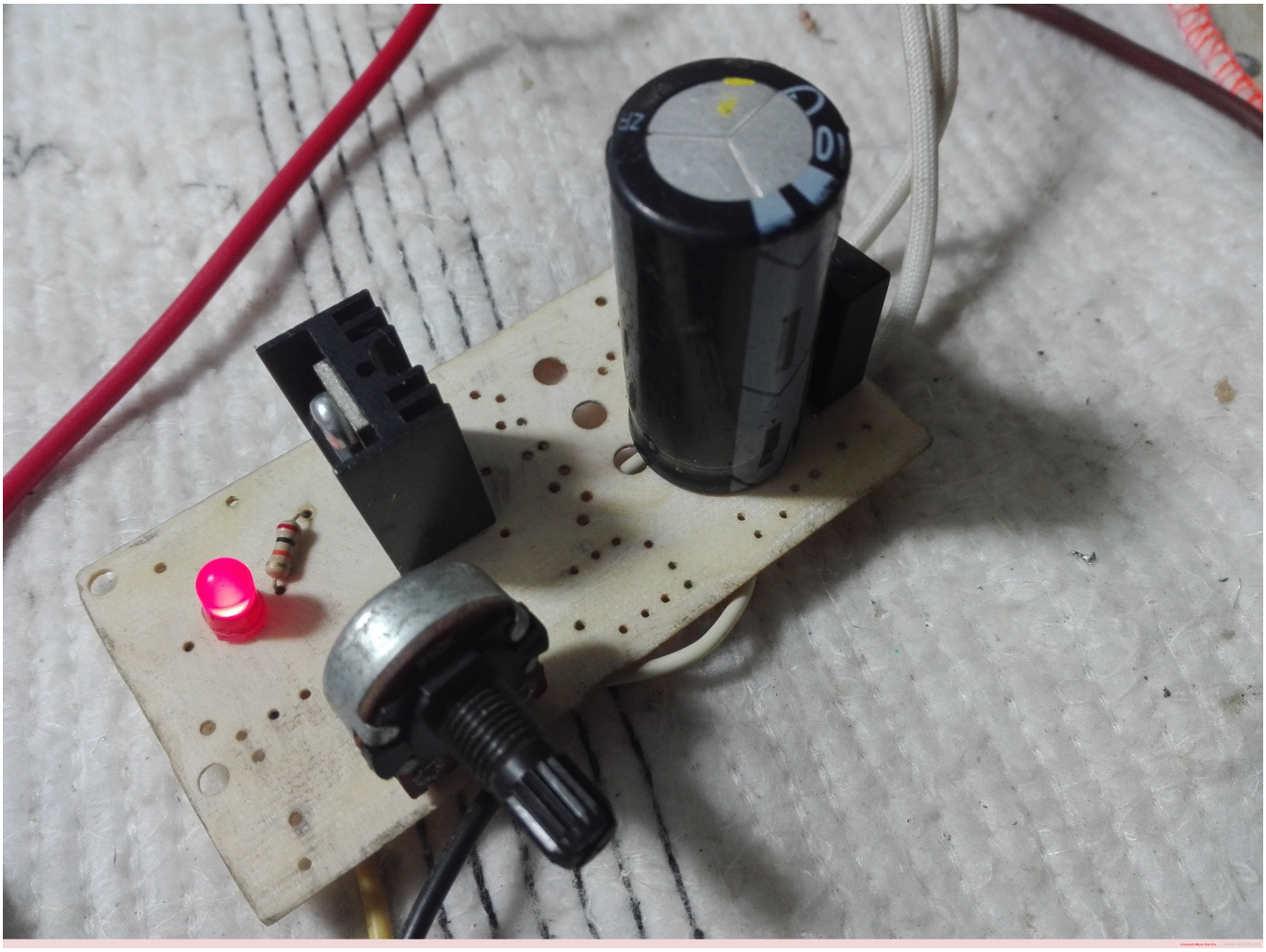

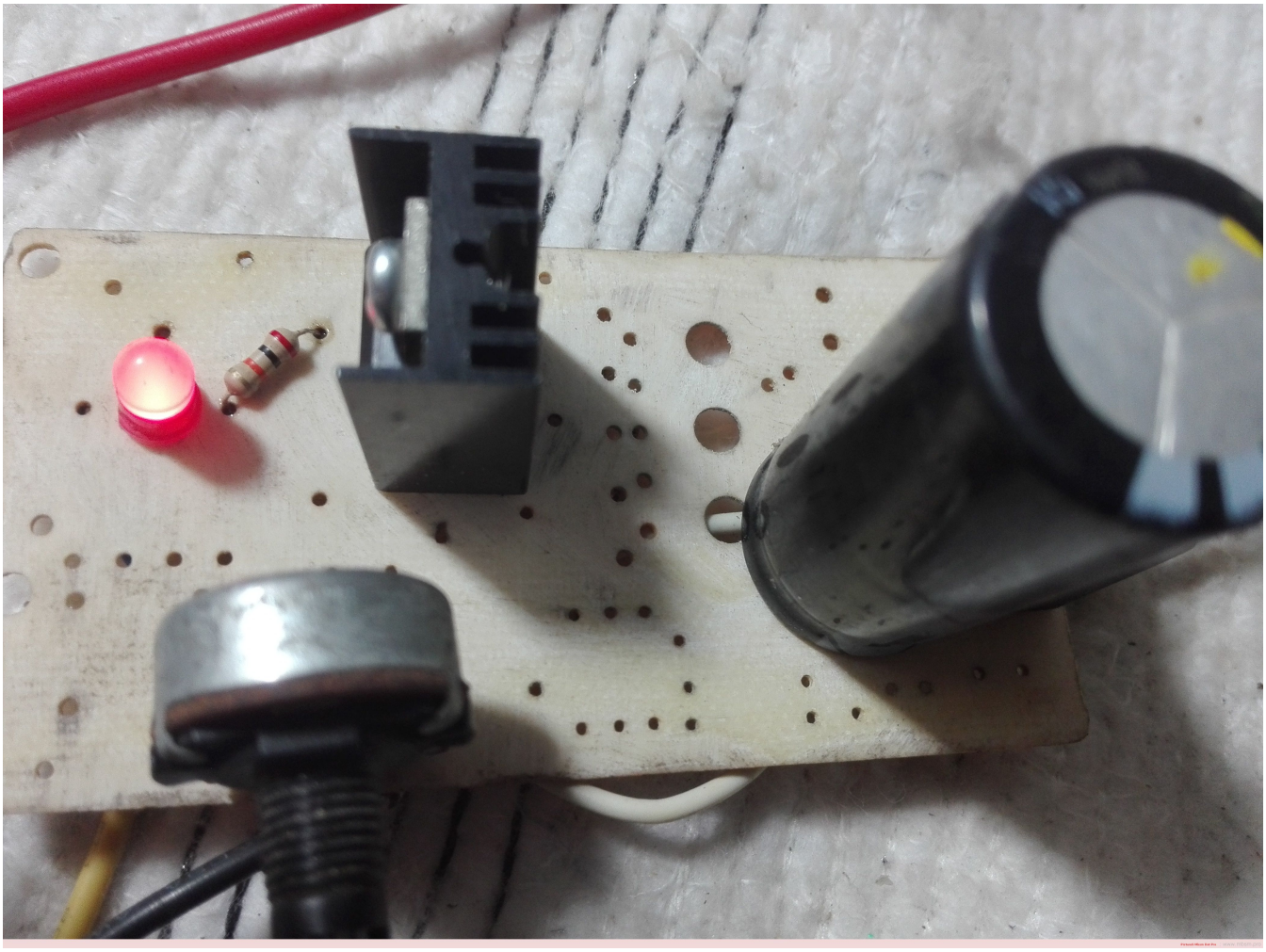

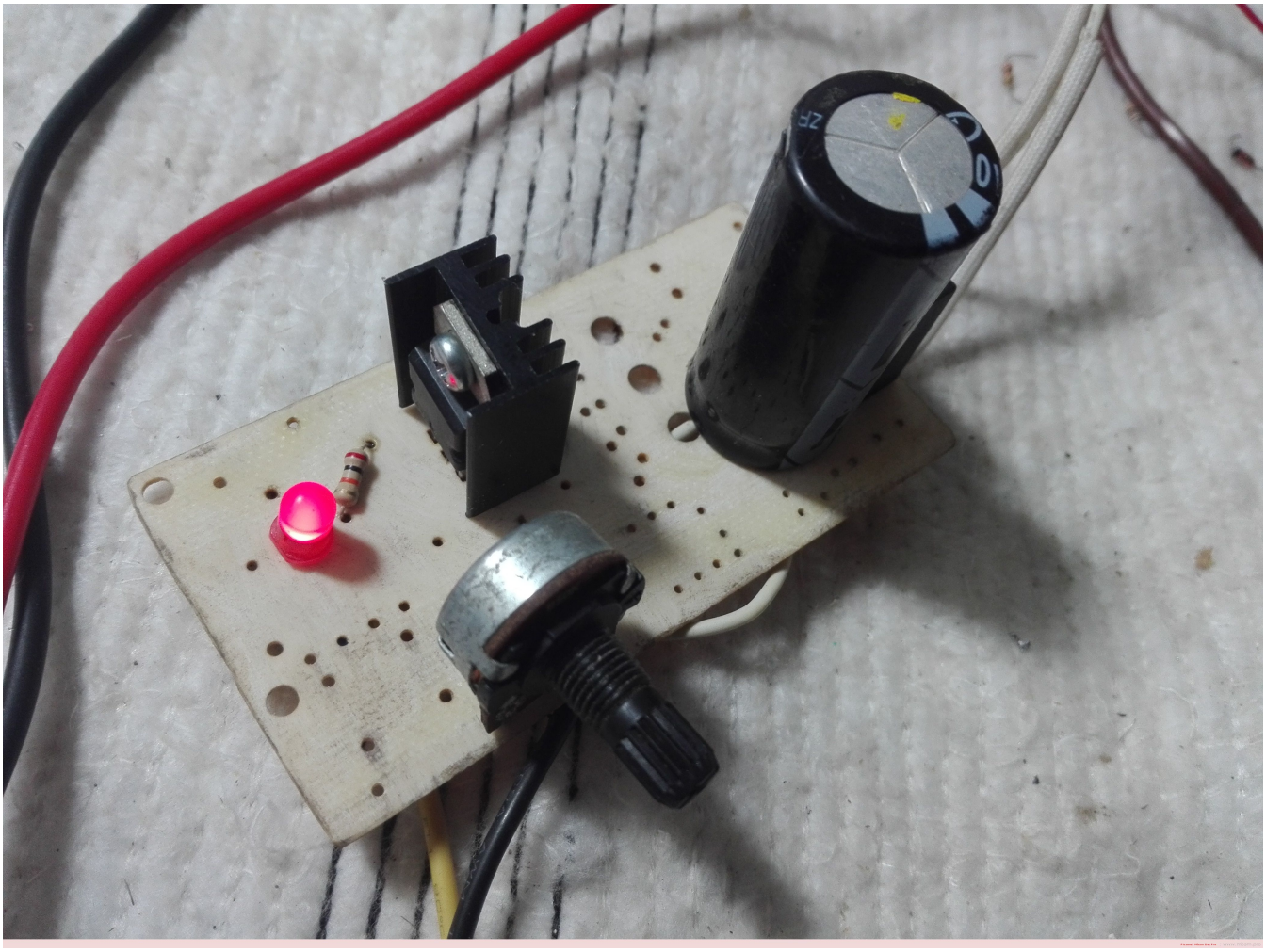
ZR

Pictures2 Nikon Cam Pro | www.mbam.pro

Mbsm.pro, IRF830 MOSFE , in power seplay , old Fortec star 3000

Category: Développement,electronique
written by www.mbsm.pro | 12 August 2018

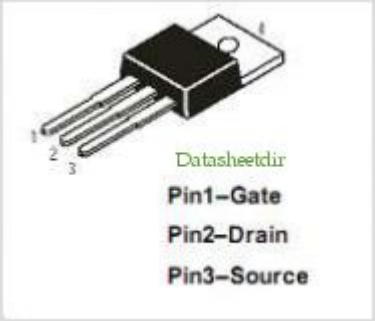

Type Designator: IRF830
Type of Transistor: MOSFET
Type of Control Channel: N -Channel
Maximum Power Dissipation (Pd): 100 W
Maximum Drain-Source Voltage |Vds|: 500 V
Maximum Gate-Source Voltage |Vgs|: 20 V
Maximum Gate-Threshold Voltage |Vgs(th)|: 4 V
Maximum Drain Current |Id|: 4.5 A
Maximum Junction Temperature (Tj): 150 °C
Drain-Source Capacitance (Cd): 800 pF
Maximum Drain-Source On-State Resistance (Rds): 1.5 Ohm
Package: TO220
Use the motor voltage and current specifications (either from the data sheet or from experimentation) to determine which transistors to choose. Selecting transistors with greater capacity will provide a margin of safety in your design.
For the purposes of this tutorial, I am using motors specified at 6V where they draw approximately 130mA. I will choose transistors I happen to have in my parts box. If I didn't have anything on hand that would work, I would buy something that could handle 2X the voltage and current.

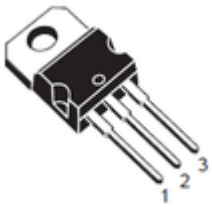

The **IRF830** is an E-Mode N-channel MOSFET rated at 500V with an continuous current rating of 4.5A and a pulsed current rating of 18A. This is more than adequate for these motors.
It also has an internal diode for back-EMF protection.

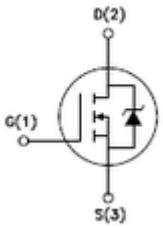

The **IRF9530** is an E-Mode P-channel MOSFET rated at 100V with a continuous current rating of 7.5A and a pulsed current rating of 48A. It is also more than adequate for my needs.
It also has an internal diode of back-EMF protection.
The pin out of the IRF9530 if the same as that of the IRF830 – **Gate = pin 1;**

Drain = pin 2; Source = pin 3 (when viewed from the front.)

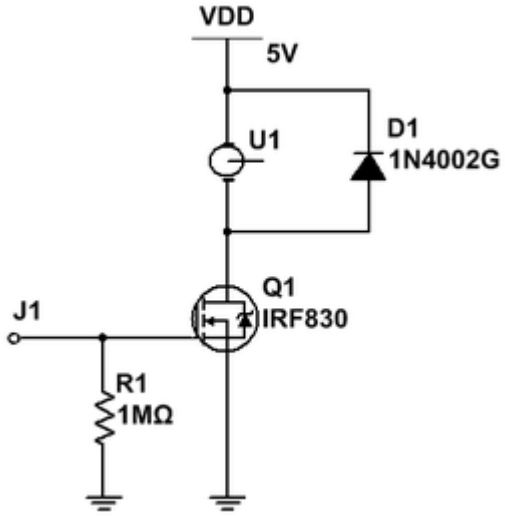

Motor connected from +V to transistor

Always use an N-channel MOSFET when the transistor is directly connected directly to either -V or GND. In this configuration, the transistor's source pin sinks current from the motor directly back to the power supply. A HIGH on the Gate turns the transistor ON.

D1 is an added external diode to offer the transistor back-EMF protection. It is not required when using a transistor such as the IRF830 because it already has an internal diode for the same purpose. It is shown here simply to show how it should always be connected when using a transistor without an internal diode. It will be omitted from future circuits unless necessary.

R1 is a pull down resistor to ensure a LOW signal to the gate unless it is specifically driven HIGH.

Connections: Drain to motor; Source to GND; Gate to control device.

J1 (the MOSFET gate) is typically connected to a micro-controller pin. A HIGH signal turns the MOSFET ON energizing the motor; a LOW signal turns the MOSFET OFF stopping the motor – **LOW = motor OFF; HIGH = motor ON**.

The advantage of this circuit is its simplicity; the disadvantage of this circuit is that the motor can only turn in one direction making it suitable for controlling a fan or pump, but, not for a reversible robot.

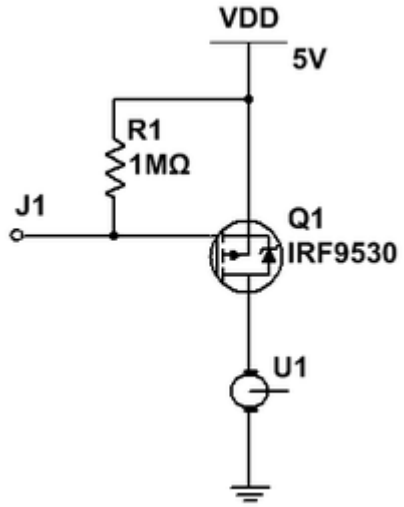

Motor connected from transistor to -V/GND

Always use a P-channel MOSFET when the transistor is directly connected to +V. In this configuration, the transistor's drain pin channels current to the motor from where it will return to the power supply. A LOW on the Gate turns the transistor ON.
R1 is a pull up resistor to ensure a HIGH signal to the gate unless it is specifically driven LOW.
Connections: Drain to motor; Source to +V; Gate to control device.
J1 (the MOSFET gate) is typically connected to a micro-controller pin. A LOW signal turns the MOSFET ON energizing the motor; a HIGH turns the MOSFET OFF stopping the motor – **LOW = motor ON; HIGH = motor OFF**.
The advantage of this circuit is its simplicity; the disadvantage of this circuit is that the motor can only turn in one direction making it suitable for controlling a fan or pump, but, not for a reversible robot.
Depending upon desired motor response to specific logic levels, either of these circuits is well suited to function as described above.

Mbsm.pro, Retardateur d'ampérage de démarrage , Exécution de 3000 W sur un ampérage max 10 a

Category: Invention,Technologie
written by www.mbsm.pro | 12 August 2018
Mbsm.pro, Retardateur d'ampérage de démarrage , Exécution de 3000 W sur un ampérage max 10 a
3000 w = 3000/220 v= 13.636 a
le but c'est démarrer une machine 3000 W sous un disjoncteur 10 A
10 A = 220 V * 10 A = 2200 W
3000 W – 2200 W = 800 w = 800 W /220 V = 3.636 A

CBB65
60+5μF
450VAC
40/85/21
TÜV
CBB65
60+5μF
450VAC
40/85/21
TÜV

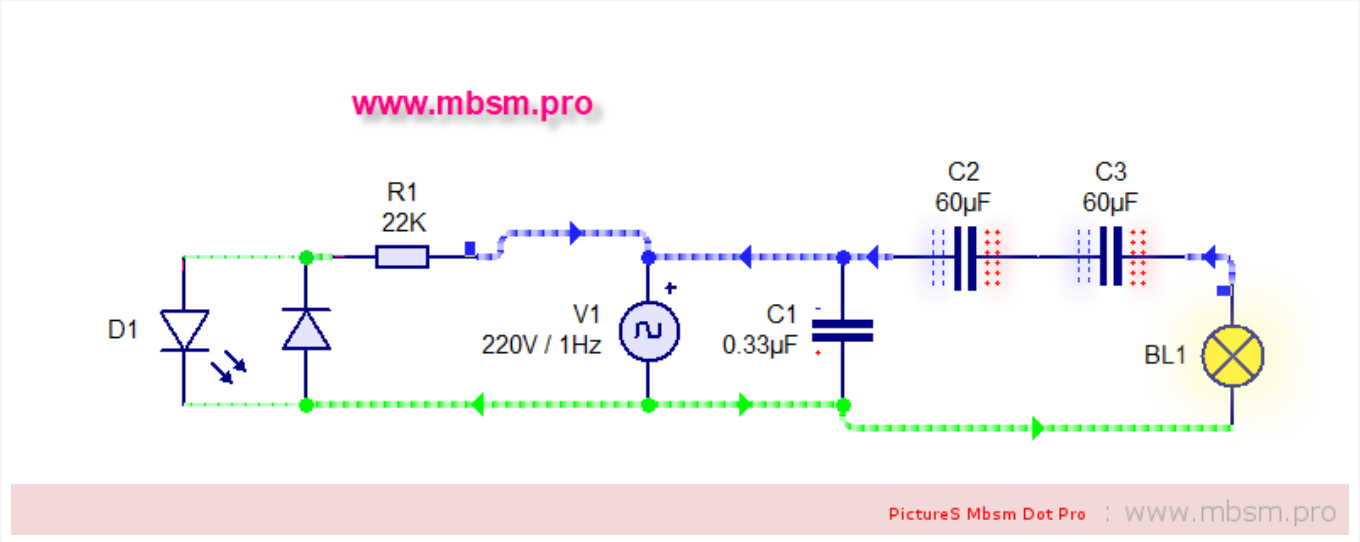
www.mbsm.pro
R1
22K
C2
60µF
C3
60µF
D1
V1
220V / 1Hz
C1
0.33µF
BL1
PictureS Mbsm Dot Pro : www.mbsm.pro

CBB65
40/85/21
TÜV

PicturesE Nikon Cam Pro | www.mbem.pro

Pictures© Hikam Dwi Pra - www.mbsm.pro

MSL
Tu
Mas
CBB65
60+5μF
450VAC
40/85/21
TÜV
MSL PA
Tunis
Master-
CBB65 CAP
60+5μF±5
450VAC B
40/85/21
TÜV
Vegetab

MSL
Tu
Mas
065 C
250V~

Mbsm.pro , Testeur de câble , camera (bnc connector) , USB, Rg45 , Rg11, Port 1394 , Produit tester, par mbsmgroup

Category: Tester ok
written by www.mbsm.pro | 12 August 2018
Mbsm.pro , Testeur de câble , camera (bnc connecter) , USB, Rg45 , Rg11, Port 1394 , Produit tester, par mbsmgroup

Cable Tester
RJ-45
RJ-11
1394
USB
BNC
Power
Connected
Short
Low Battery
No Connection
Cross
S/G 1 2 3 4 5 6 7 8
RJ-45
RJ-11
1394
USB
BNC

5 in 1 Cable Tester

TO TEST JUMPER CABLES:

Plug cable into appropriate jack on the Master Unit and Remote
Press TEST button and observe LEDs on Master Unit to find faults

TO TEST INSTALLED CABLES:

Plug cable into appropriate jack on the Master Unit. Locate other end of cable and plug into appropriate jack on Remote.
Press TEST button and observe LEDs on Master Unit to find faults

The 5 in 1 checks for Cable Continuity, Miswiring, Opees, Shorts, Crossover and Grounding.

Maximum Cable Length = 600 Feet (RJ-45/RJ-11/BNC)

Refer to manual for complete instructions.

CAUTION: Do not connect to a live circuit.
Do not test more than one cable simultaneously

CE

Cable Tester
RJ-45
RJ-11
1394
USB
BNC
Power
Connected
Short
Low Battery
No Connection
Cross
S/G
1
2
3
4
5
6
7
8
5 in 1 Cable Tester
Remote Unit

Printed3 Nikon Dxo Pro : www.mbsm.pro

Cable Tester
RJ-45
RJ-11
1394
USB
BNC
Power
Connected
Short
Low Battery
No Connection
Cross
S/G
1
2
3
4
5
6
7
8
5 in 1 Cable Tester
Remote Unit

RJ-45
RJ-11
1394
USB
BNC
Power
Low Battery
Connected
No Connection
Short
Cross
Cable Tester
S/G 1 2 3 4 5 6 7 8
RJ-45
RJ-11
1394
USB
BNC
5 in 1 Cable Tester
Remote Unit

Mbsm.pro, 1998 , la première foie, je touche, une disquette pc ,et j’installe un logiciel

Category: Old Pics Archive
written by www.mbsm.pro | 12 August 2018

Mbsm.pro, 1998 , la première foie, je touche, une disquette pc ,et j’installe un logiciel

HD
Drop on liquid here
Cleaning Disk.
Do not use more than 15 times. If diskette becomes discolored from head contamination, discard and use new cleaning diskette.
Clean head after 8 hours of use or at least once a week.
1 2 3 4 5 6 7 8 9 10 11 12 13 14 15

CLEANING F
with Cleaning Diske
cap. Puncture bo
cap immediately af
IN
a cool place. Keep
ne. Keep out of the
n. If ingested.
nduce vomiting. D
arge glasses of wa
ysician.
isopropyl alcohol
FLAMMABLE.
Drop on liquid here
Cleaning Disk.
Do not use more than 15 times. If diskette becomes discolored from head contamination, discard and use new cleaning diskette.
Clean head after 8 hours of use or at least once a week.
1 2 3 4 5 6 7 8 9 10 11 12 13 14 15

licence n°K0807178WCX
CIEL!
DISQ 1/8
version
4.50
GESTION COMMERCIAL
POUR WINDOWS
(c) copyright 1998
Compagnie Internationale d'Edition de Logiciels

licence n°K0807178WGX
CIEL!
DISQUE 1/8
version
4.50 GESTION COMMERCIAL
(c) copyright 1998 POUR WINDOWS
Compagnie Internationale d'Edition de Logiciels

licence n° K08071178WQX

CIEL!

DISQUE 1/8

version

4.50 GESTION COMMERCIAL

POUR WINDOWS

(c) copyright 1998

Compagnie Internationale d'Edition de Logiciels

licence n°
CIEL!
version
(C) copyright 1998
Compagnie Internationale d'Edition de Logiciels

Mbsm.pro ,Inverser la rotation, d’un moteur 9v Dc, avec DPDT Rely

Category: Technologie
written by www.mbsm.pro | 12 August 2018
Mbsm.pro ,Inverser la rotation, d’un moteur 9v Dc, avec DPDT Rely
Mbsm.pro ,Inverser la rotation, d’un moteur 9v Dc, avec DPDT Rely

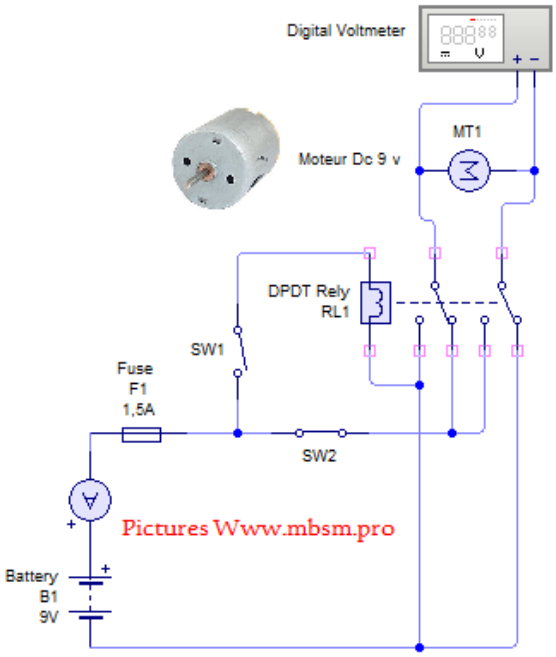

PictureS Mbsm Dot Pro : www.mbsm.pro

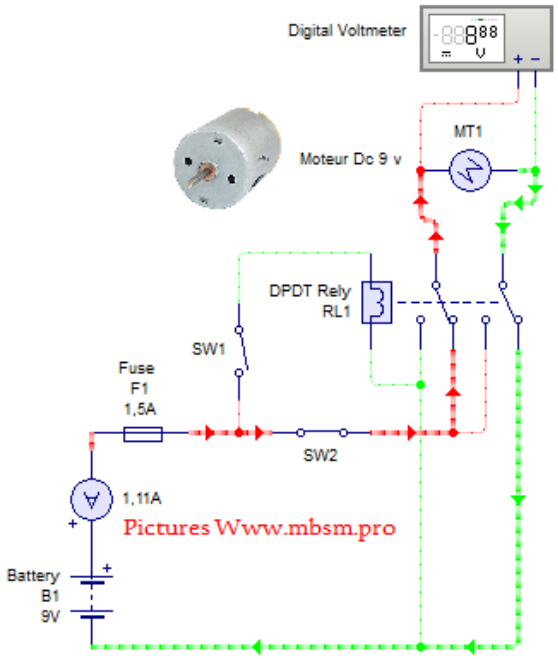

PictureS Mbsm Dot Pro : www.mbsm.pro

Mbsm.pro ,Inverser la rotation, d’un moteur 9v Dc, avec DPDT Switch

Category: Technologie
written by www.mbsm.pro | 12 August 2018
Mbsm.pro ,Inverser la rotation, d’un moteur 9v Dc, avec DPDT Switch
Mbsm.pro ,Inverser la rotation, d’un moteur 9v Dc, avec DPDT Switch

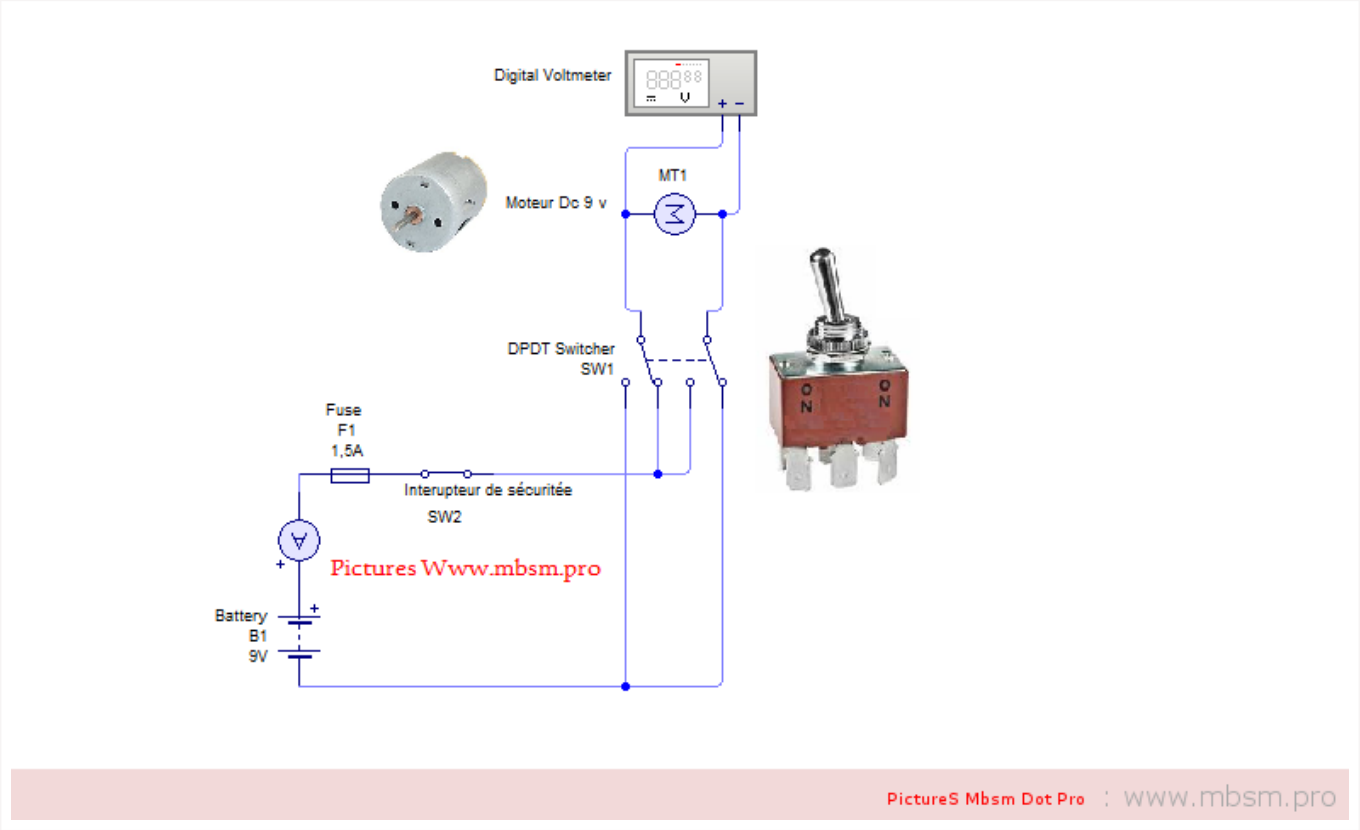

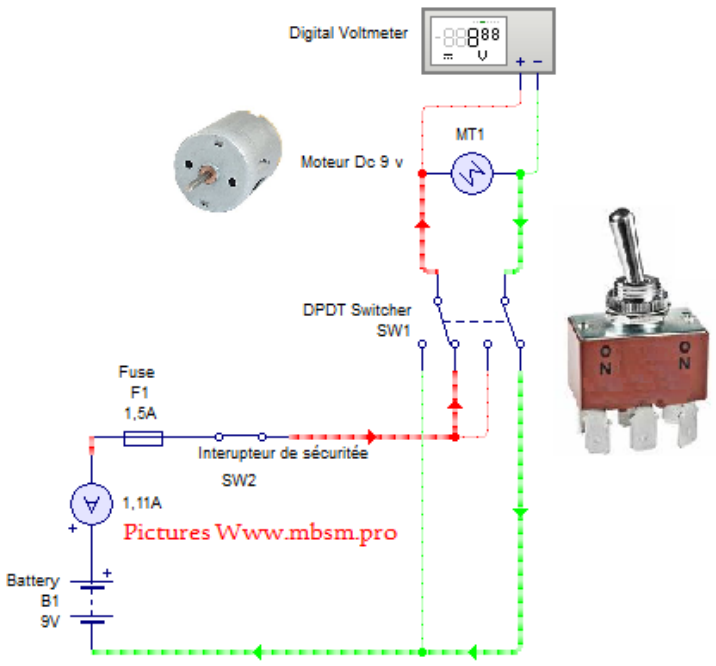

PictureS Mbsm Dot Pro : www.mbsm.pro