Mbsm.pro, Alignment of Pumps

Category: Pictures
written by www.mbsm.pro | 6 December 2024

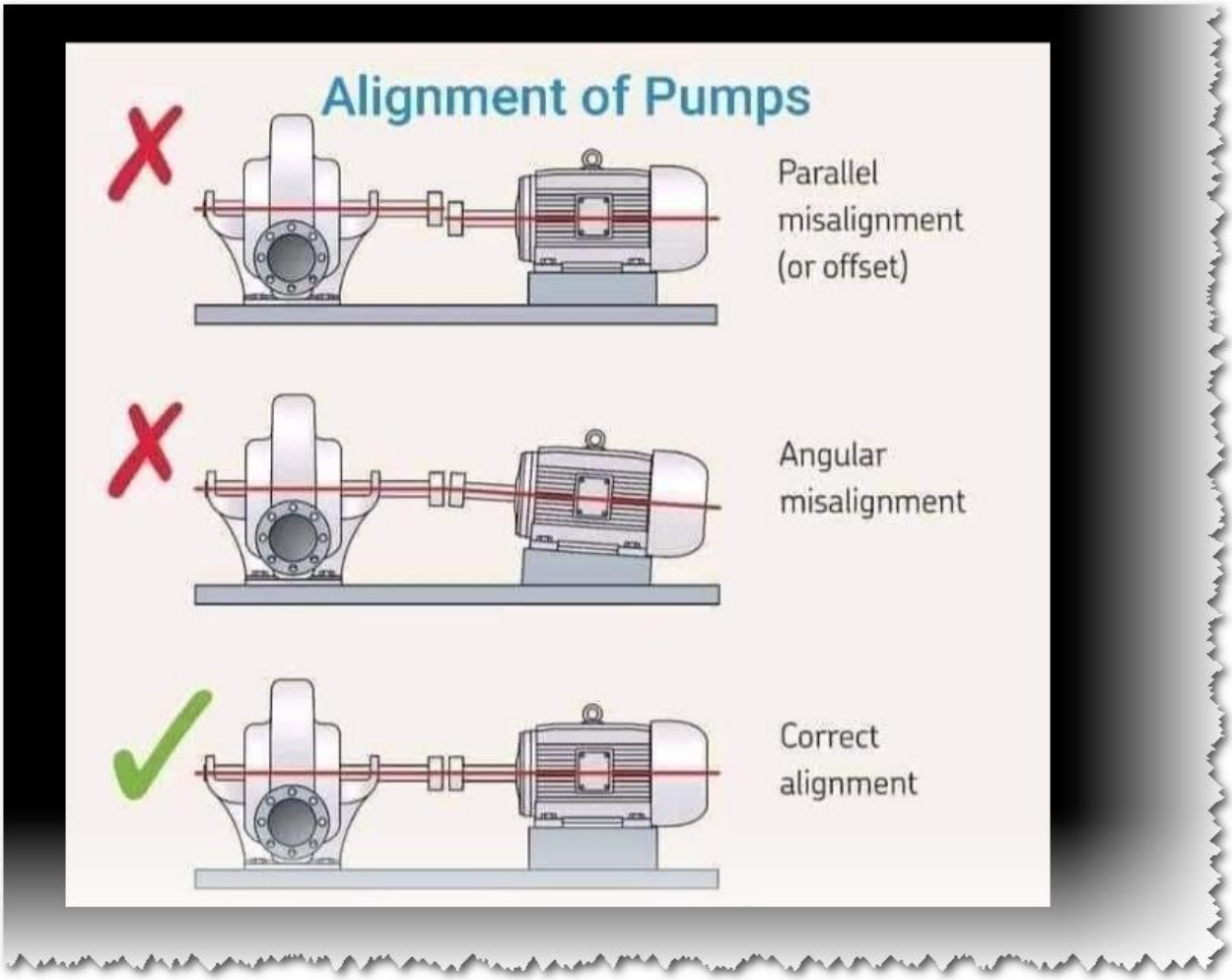

Private Picture Copyright : WWW.MBSM.PRO

Alignment of Pumps

Mbsm.pro, LG, Single Door, Refrigerator, 1 Pin Relay, and Over Load, Protector Set

Category: Pictures
written by www.mbsm.pro | 6 December 2024

Mbsm.pro, LG, Single Door, Refrigerator, 1 Pin Relay, and Over Load, Protector Set

---

Mbsm.pro, Refrigerator, All Size Condenser Length Details in table with Feet

Category: expertise,Pictures
written by www.mbsm.pro | 6 December 2024

Mbsm.pro, Refrigerator, All Size Condenser Length Details in table with Feet

CSIR, CSIR(relay)

Category: Pictures
written by www.mbsm.pro | 6 December 2024

CSIR

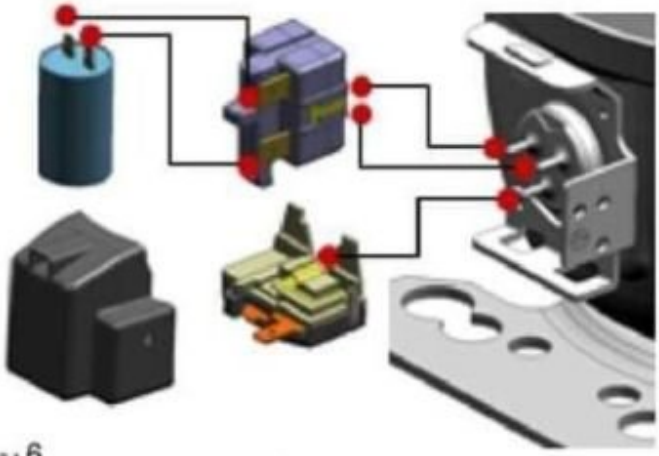

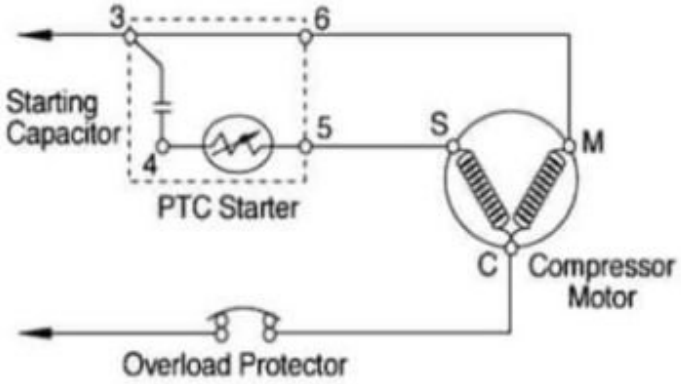

CSIR (Relay)

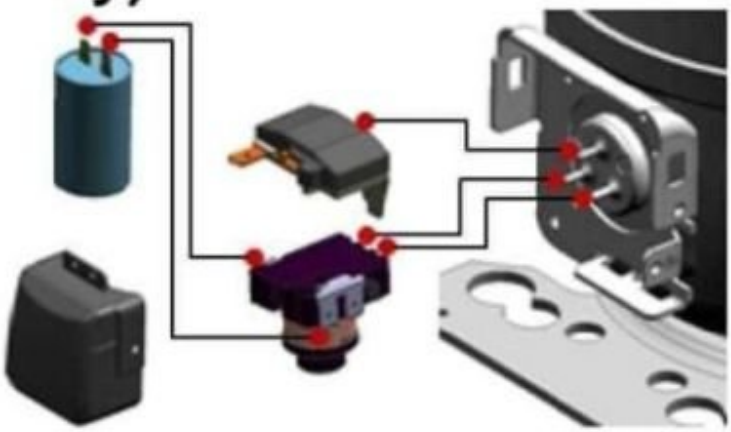

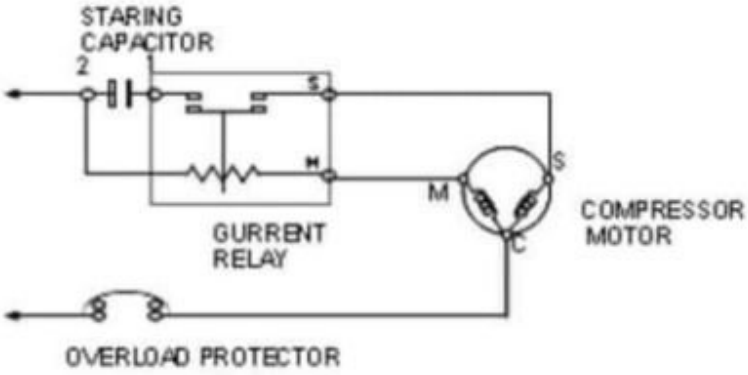

Private Picture Copyright : WWW.MBSM.PRO

Mbsm.pro, Picture, Compressor R600a

Category: Pictures
written by www.mbsm.pro | 6 December 2024

型号 Model	气缸容积 Displacement	冷却方式 Cooling	电机类型 Motor Type	制冷量 Cooling Capacity				COP				认证 Certification	最大高度 "A" Max. Height "A"
				ASHRAE		AHAM	CECOMAF	ASHRAE		AHAM	CECOMAF		
				-23.3℃		-23.3/ 40.5℃	-25℃	-23.3℃		-23.3/ 40.5℃	-25℃		
	cm³			W	Btu	W	W	W/W	EER	W/W	W/W		
LBP													
115V 60HZ R600a													
T 系列 T Series													
ETZ50U6	5.0	ST	RSCR	96	328	104.9	71.9	1.70	5.8	2.00	1.33	UL	182
ETZ60U6	6.0	ST	RSCR	120	409	131.1	89.9	1.70	5.8	2.00	1.33	UL	182
ETZ72U6	7.2	ST	RSCR	142	485	154.5	107.3	1.70	5.8	2.00	1.33	UL	182
ETZ80U6	8.0	ST	RSCR	165	563	179.5	124.7	1.70	5.8	2.00	1.33	UL	182
ETB60U6	6.0	ST	RSCR	120	409	130.6	90.7	1.83	6.2	2.16	1.43	UL	185
ETB72U6	7.2	ST	RSCR	145	495	157.8	109.6	1.83	6.2	2.16	1.43	UL	185
ETB80U6	8.1	ST	RSCR	167	570	181.7	126.5	1.83	6.2	2.16	1.43	UL	185
ETB90U6	9.0	ST	RSCR	190	648	206.7	143.9	1.83	6.2	2.16	1.43	UL	185
ETB110U6	10.7	ST	RSCR	220	751	239.4	166.7	1.81	6.1	2.14	1.42	UL	185
S 系列 S Series													
ESD60U6	6.0	ST	RSIR	120	409	/	89.7	1.45	4.9	/	1.13	UL	162.5
ESD72U6	7.2	ST	RSIR	145	495	/	109.3	1.45	4.9	/	1.13	UL	162.5
ESD80U6	8.0	ST	RSIR	165	563	/	124.6	1.45	4.9	/	1.13	UL	162.5
ESY60U6	6.0	ST	RSCR	120	409	/	90.8	1.60	5.5	/	1.25	UL	171
ESY80U6	8.0	ST	RSCR	165	563	/	124.5	1.60	5.5	/	1.25	UL	171
Y 系列 Y Series													
EYA40U6	4.0	ST	RSIR	70	239	76.1	52.8	1.40	4.8	1.66	1.09	UL	153
EYA55U6	5.5	ST	RSIR	105	358	114.2	79.5	1.40	4.8	1.66	1.09	UL	153
220 ~ 240V 60HZ R600a													
T 系列 T Series													
ETH46X6	4.5	ST	RSCR	85	290	/	64.2	1.76	6.0	/	1.38	VDE/CB	185
100V 50HZ R600a													
T 系列 T Series													
ETD50F	5.0	ST	RSCR	80	273	/	60.2	1.40	4.8	/	1.09	——	179
ETD72F	7.2	ST	RSCR	125	427	/	94.3	1.40	4.8	/	1.10	——	179
ETD80F	8.1	ST	RSCR	145	495	/	108.5	1.40	4.8	/	1.10	——	179
100V 60HZ R600a													
T 系列 T Series													
ETD50F	5.0	ST	RSCR	95	324	/	71.8	1.50	5.1	/	1.17	——	179
ETD72F	7.2	ST	RSCR	145	495	/	109.8	1.50	5.1	/	1.18	——	179
ETD80F	8.1	ST	RSCR	165	563	/	124.0	1.50	5.1	/	1.17	——	179
127V 60HZ R600a													
T 系列 T Series													
ETH46Y6	4.5	ST	RSCR	85	290	/	63.7	1.76	6.0	/	1.38	VDE/CB	185

Private Picture Copyright : WWW.MBSM.PRO

TOEFLEX

R600a COMPRESSOR R600a压缩机

Private Picture Copyright : WWW.MBSM.PRO

型号 Model	气缸容积 Displacement	冷却方式 Cooling	电机类型 Motor Type	制冷量 Cooling Capacity ASHRAE -23.3℃		AHAM -23.3/40.5℃	CECOMAF -25℃	COP ASHRAE -23.3℃		AHAM -23.3/40.5℃	CECOMAF -25℃	认证 Certification	最大高度 "A" Max. Height "A"
	cm³			W	Btu	W	W	W/W	EER	W/W	W/W		
LBP													
115V 60HZ R600a													
T 系列 T Series													
ETZ50U6	5.0	ST	RSCR	96	328	104.9	71.9	1.70	5.8	2.00	1.33	UL	182
ETZ60U6	6.0	ST	RSCR	120	409	131.1	89.9	1.70	5.8	2.00	1.33	UL	182
ETZ72U6	7.2	ST	RSCR	142	485	154.5	107.3	1.70	5.8	2.00	1.33	UL	182
ETZ80U6	8.0	ST	RSCR	165	563	179.5	124.7	1.70	5.8	2.00	1.33	UL	182
ETB60U6	6.0	ST	RSCR	120	409	130.6	90.7	1.83	6.2	2.16	1.43	UL	185
ETB72U6	7.2	ST	RSCR	145	495	157.8	109.6	1.83	6.2	2.16	1.43	UL	185
ETB80U6	8.1	ST	RSCR	167	570	181.7	126.5	1.83	6.2	2.16	1.43	UL	185
ETB90U6	9.0	ST	RSCR	190	648	206.7	143.9	1.83	6.2	2.16	1.43	UL	185
ETB100U6	10.7	ST	RSCR	220	751	239.4	166.7	1.81	6.1	2.14	1.42	UL	185
S 系列 S Series													
ESD60U6	6.0	ST	RSIR	120	409	/	89.7	1.45	4.9	/	1.13	UL	162.5
ESD72U6	7.2	ST	RSIR	145	495	/	109.3	1.45	4.9	/	1.13	UL	162.5
ESD80U6	8.0	ST	RSIR	165	563	/	124.6	1.45	4.9	/	1.13	UL	162.5
ESY60U6	6.0	ST	RSCR	120	409	/	90.8	1.60	5.5	/	1.25	UL	171
ESY80U6	8.0	ST	RSCR	165	563	/	124.5	1.60	5.5	/	1.25	UL	171
Y 系列 Y Series													
EYA40U6	4.0	ST	RSIR	70	239	76.1	52.8	1.40	4.8	1.66	1.09	UL	153
EYA55U6	5.5	ST	RSIR	105	358	114.2	79.5	1.40	4.8	1.66	1.09	UL	153
220 ~ 240V 60HZ R600a													
T 系列 T Series													
ETH468K	4.5	ST	RSCR	85	290	/	64.2	1.76	6.0	/	1.38	VDE/CB	185
100V 50HZ R600a													
T 系列 T Series													
ETD50F	5.0	ST	RSCR	80	273	/	60.2	1.40	4.8	/	1.09	——	179
ETD72F	7.2	ST	RSCR	125	427	/	94.3	1.40	4.8	/	1.10	——	179
ETD80F	8.1	ST	RSCR	145	495	/	108.5	1.40	4.8	/	1.10	——	179
100V 60HZ R600a													
T 系列 T Series													
ETD50F	5.0	ST	RSCR	95	324	/	71.8	1.50	5.1	/	1.17	——	179
ETD72F	7.2	ST	RSCR	145	495	/	109.8	1.50	5.1	/	1.18	——	179
ETD80F	8.1	ST	RSCR	165	563	/	124.0	1.50	5.1	/	1.17	——	179
127V 60HZ R600a													
T 系列 T Series													
ETH469S	4.5	ST	RSCR	85	290	/	63.7	1.76	6.0	/	1.38	VDE/CB	185

Private Picture Copyright : WWW.MBSM.PRO

Verdichter - Cubigel

R-600a, LBP

Hermetische Verdichter für Kapillarohrbetrieb
Hochleistungs-Verdichter mit Betriebskondensatoren.
LBP Temperaturbereich -30 °C bis -10 °C.
Netzspannung 220 - 240 V / 50 Hz.

Artikelnr.	Typ	Leistung (PS)	Kälteleistung [W] t_0 -25 °C, t_k +45 °C
			-25
47-32 HQ45AA	HQ 45 AA	1/12	52
47-32 HQ55AA	HQ 55 AA	1/9	62
47-32 HQ70AA	HQ 70 AA	1/8	80
47-32 HQ80AA	HQ 80 AA	1/7	99
47-32 HQ90AA	HQ 90 AA	1/7	109
47-32 HQ99AA	HQ 99 AA	1/6	119
47-32 HP112AA	HP 112 AA	1/5	144
47-32 HP114AA	HP 114 AA	1/5	166
47-32 HP116AA	HP 116 AA	1/4	181

WWW.MBSM.PRO

Private Picture Copyright : WWW.MBSM.PRO

Condor cfh-t36gm05

Category: Pictures
written by www.mbsm.pro | 6 December 2024

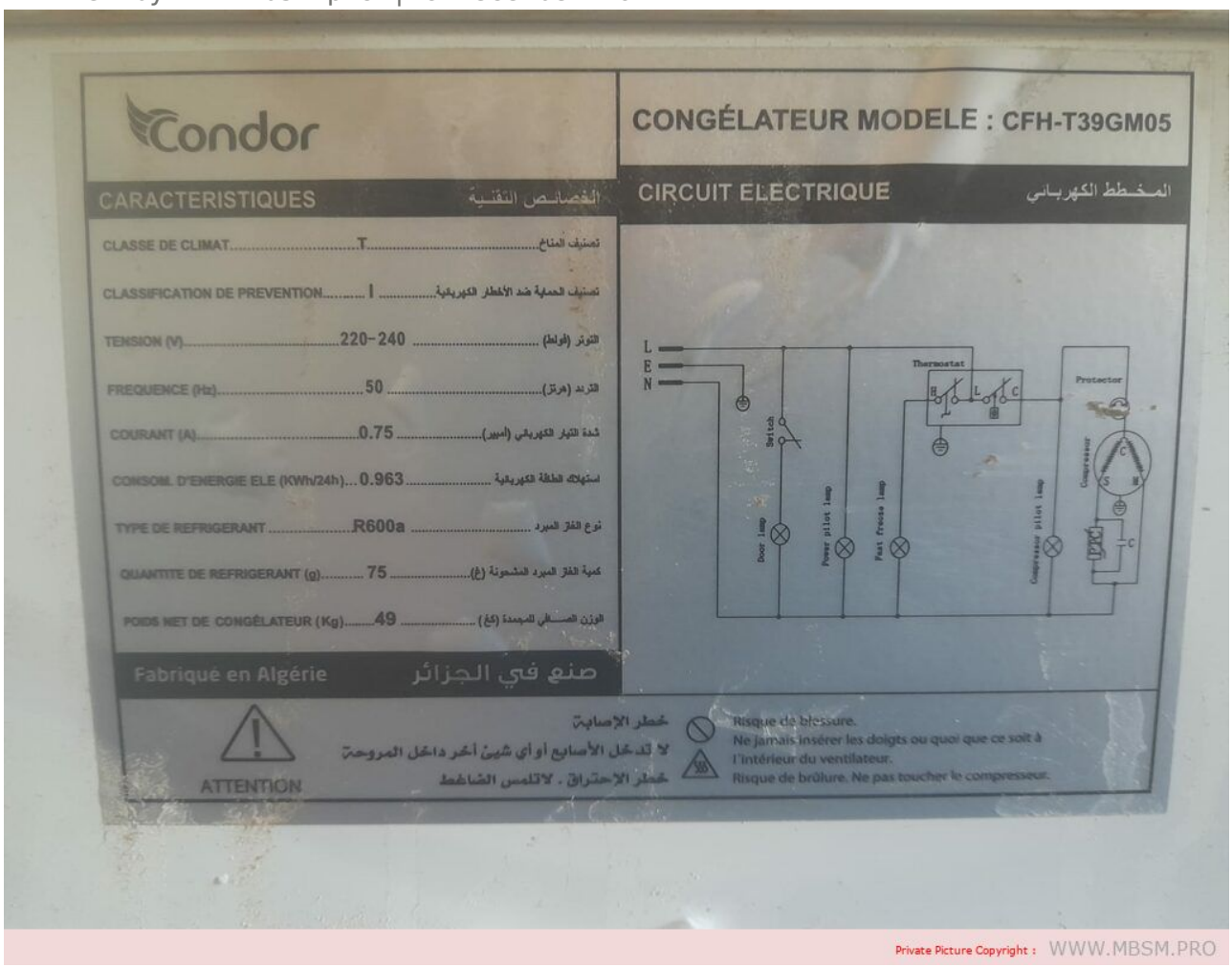

Mbsm.pro, Condor cfh-t36gm05

Private Picture Copyright : WWW.MBSM.PRO

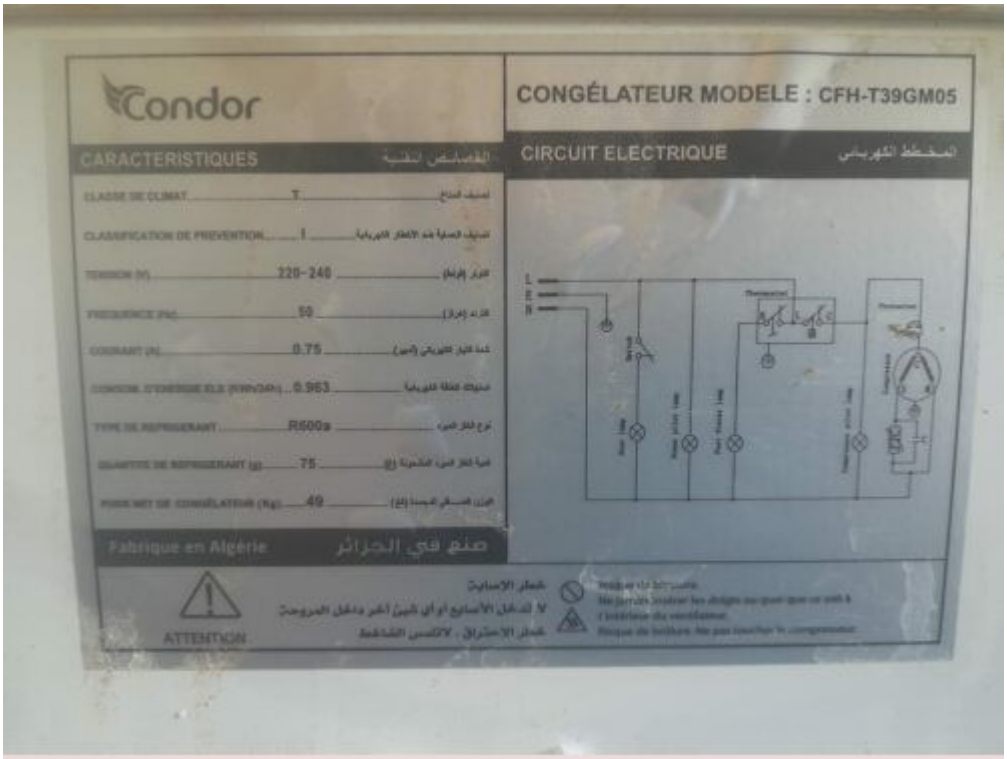

Private Picture Copyright : WWW.MBSM.PRO

Mbsm.pro, Capillary measurement tables for some compressors Freon R134

Category: Pictures
written by www.mbsm.pro | 6 December 2024

المواصفات الخاصة بضواغط DANFU

R134a		نوع الفريون		LBP	ضواغط التجميد		
220 - 240 V / 50 Hz					الفولت		
Model	Displ. Cm3 الازاحة	Power HP	Cooling capacity W سعة التبريد (القدرة)	Input Power W الكهرباء المسحوبة	Performance W/W معدل الاداء	Motor type نوع الموتور	Cooling type نوع تبريد الضاغط
PW2.0VKL	2.65	1/11	55	65	0.85	RSIR	S
PW2.5VKL	2.95	1/10	65	72	0.90	RSIR	S
PW3.0VK	3.16	1/9	80	84	0.95	RSIR	S
PW3.5VK	3.66	1/8	95	95	1.00	RSIR	S
PW4.0VKL	4.29	1/6-	112	102	1.10	RSIR	S
PW4.5VK	4.99	1/6+	130	113	1.15	RSIR	S
PW5.5VK	5.68	1/5+	150	122	1.23	RSIR	S
PW6.5VK	6.37	1/4-	170	136	1.25	RSIR	S
PW7.5VK	7.07	1/4	190	152	1.25	RSIR	S
PW8.5VK	8.05	1/4+	220	169	1.30	RSIR	S
DFV95	9.36	1/3	150	192	0.78	RSIR	F
DFV105	10.51	1/3+	185	219	0.84	RSIR	F
DFV115	11.49	1/3+	310	239	1.30	CSIR	F
DFV125	12.477	1/2-	340	262	1.30	CSIR	F

Private Picture Copyright : WWW.MBSM.PRO

Mbsm.pro, Capillary measurement tables for some compressors Freon R134

Mbsm.pro, compressor, DG51C69RAU6, 1/3 hp

Category: Pictures
written by www.mbsm.pro | 6 December 2024

Mbsm.pro, compressor, DG51C69RAU6, 1/3 hp

Mbsm.pro, Pictures, Cat5 cabling pin-out configuration

Category: Pictures
written by www.mbsm.pro | 6 December 2024

Pin ID	side A	side B
1	Orange-white	green-white
2	Orange	green
3	green-white	orange-white
4	blue	brown-white
5	blue-white	Brown
6	green	orange
7	brown-white	Blue
8	brown	blue-white

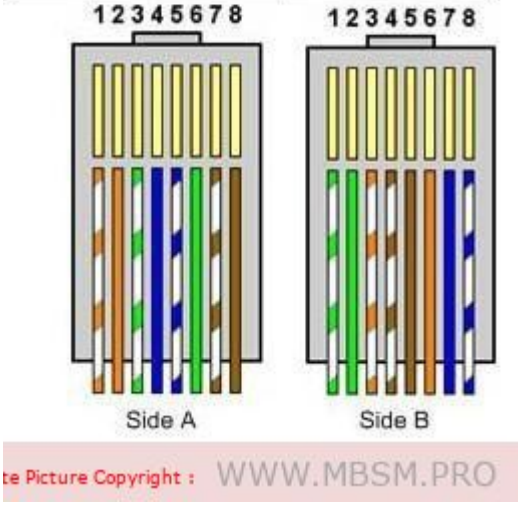

Mbsm.pro, Pictures, Cat5 cabling pin-out configuration

Mbsm.pro, Pictures, refrigerator wiring connection

Category: Pictures
written by www.mbsm.pro | 6 December 2024

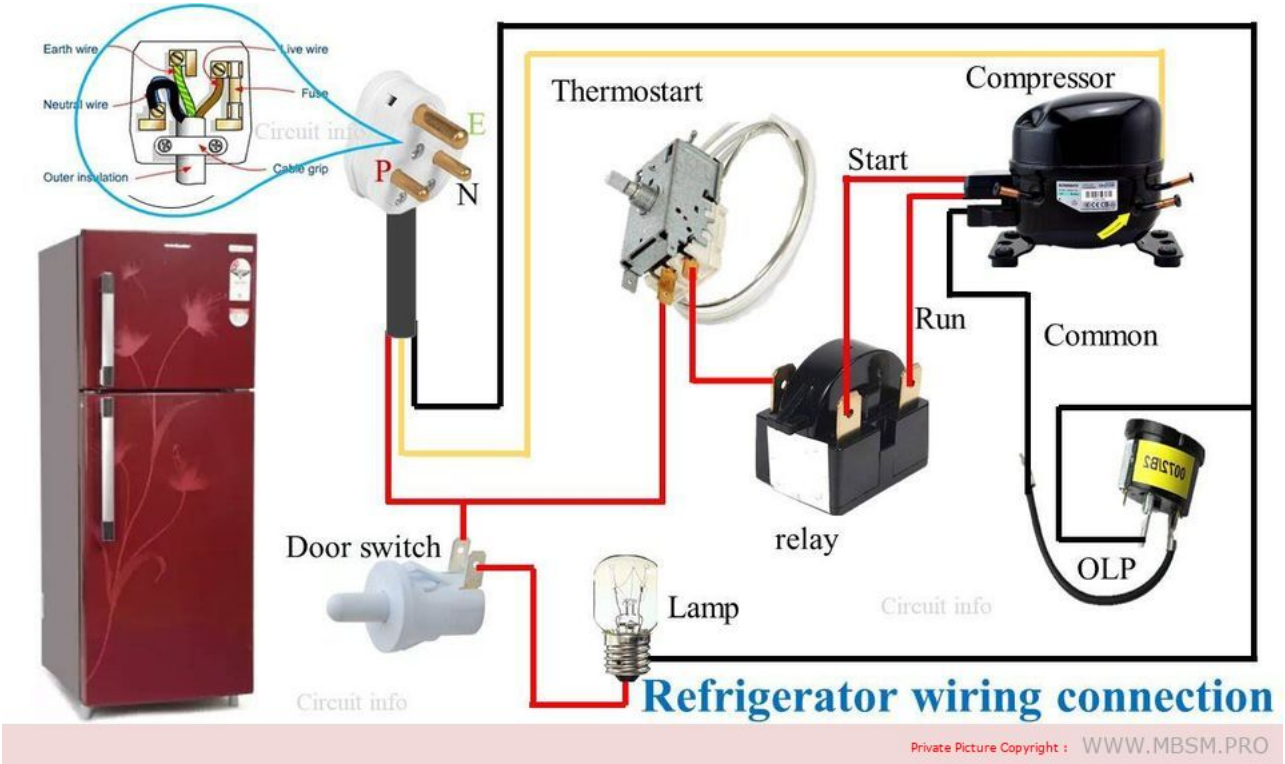

Mbsm.pro, PIctures, refrigerator wiring connection