Compressor, Embraco, EMX20CLC, High-quality, compressor Aspera, EMX20CLC, LBP R600a, 220-240V 50Hz, 3.97 cm3, 1/12HP

Category: compressor
written by www.mbsm.pro | 15 December 2021

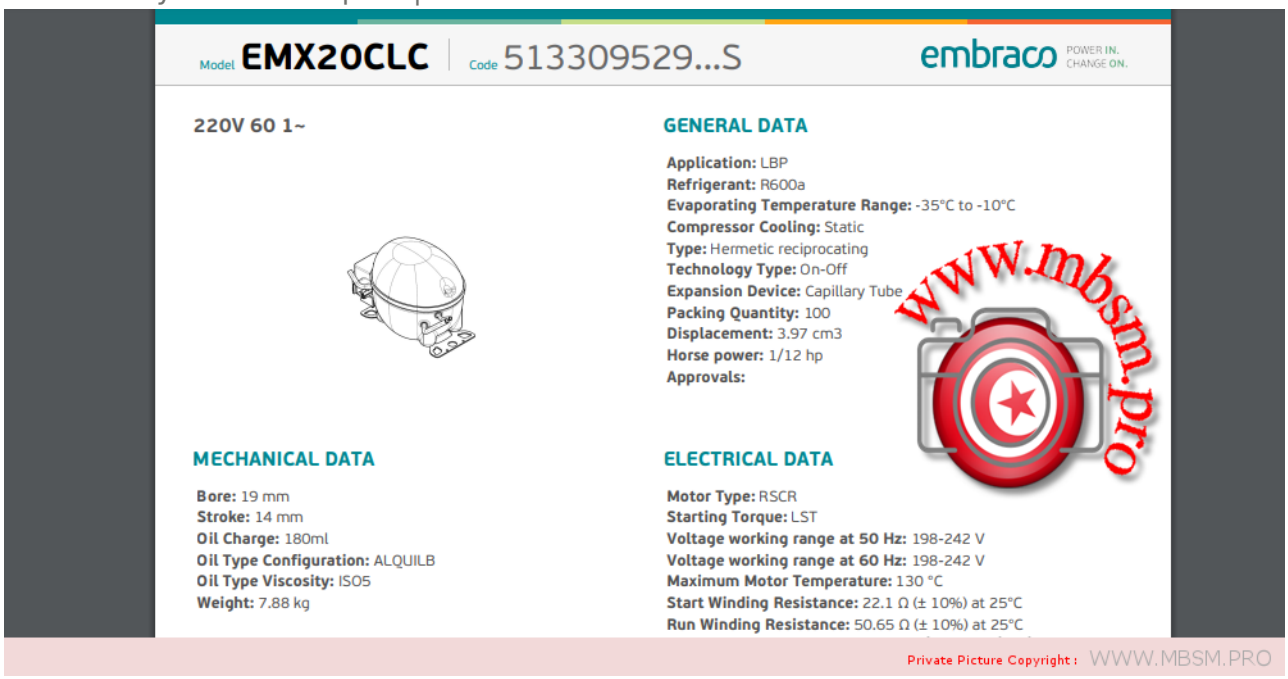

GENERAL DATA
Application: LBP
Refrigerant: R600a
Evaporating Temperature Range: -35°C to -10°C
Compressor Cooling: Static
Type: Hermetic reciprocating
Technology Type: On-Off
Expansion Device: Capillary Tube
Packing Quantity: 100
Displacement: 3.97 cm3
Horse power: 1/12 hp
Approvals:
MECHANICAL DATA
Bore: 19 mm
Stroke: 14 mm
Oil Charge: 180ml
Oil Type Configuration: ALQUILB
Oil Type Viscosity: ISO5
Weight: 7.88 kg
ELECTRICAL DATA
Motor Type: RSCR
Starting Torque: LST
Voltage working range at 50 Hz: 198-242 V

Voltage working range at 60 Hz: 198-242 V
Maximum Motor Temperature: 130 °C
Start Winding Resistance: 22.1 Ω (± 10%) at 25°C
Run Winding Resistance: 50.65 Ω (± 10%) at 25°C

Model **EMX20CLC** | Code 513309529...S

embraco POWER IN. CHANGE ON.

220V 60 1~

GENERAL DATA

Application: LBP
Refrigerant: R600a
Evaporating Temperature Range: -35°C to -10°C
Compressor Cooling: Static
Type: Hermetic reciprocating
Technology Type: On-Off
Expansion Device: Capillary Tube
Packing Quantity: 100
Displacement: 3.97 cm3
Horse power: 1/12 hp
Approvals:

MECHANICAL DATA

Bore: 19 mm
Stroke: 14 mm
Oil Charge: 180ml
Oil Type Configuration: ALQUILB
Oil Type Viscosity: ISO5
Weight: 7.88 kg

ELECTRICAL DATA

Motor Type: RSCR
Starting Torque: LST
Voltage working range at 50 Hz: 198-242 V
Voltage working range at 60 Hz: 198-242 V
Maximum Motor Temperature: 130 °C
Start Winding Resistance: 22.1 Ω (± 10%) at 25°C
Run Winding Resistance: 50.65 Ω (± 10%) at 25°C

www.mbsm.pro
Private Picture Copyright : WWW.MBSM.PRO

Private Picture Copyright : WWW.MBSM.PRO

Mbsm_dot_pro_private_PDF_EMX20CLC_techTélécharger

Bitzer, Compressor, S6F-30.2Y-40P,

Compressor Selection, Semi-hermetic Reciprocating, 1450 min-1 , 101,1 (LP) , 30hp

Category: compressor
written by www.mbsm.pro | 15 December 2021

Private Picture Copyright : WWW.MBSM.PRO

BITZER is raising the bar in terms of technology and capacity for expanded low temperature applications with the 2nd generation of 2-stage compressors. This series is the result of extensive research on the basis of years of experience in the construction of highly efficient and solid reciprocating compressors. The gas flow control and working valves are specially adapted for low temperature applications.

- Displacement at 1450 min-1 : 101,1 (LP) 50,5 (HP)
- Number of cylinders : 6
- Oilcharge : 4,75 dm3

Displacement (1450 RPM 50Hz):101.10 / 50.50 m^3/h Displacement (1750 RPM 60Hz):122.02 / 60.95 m^3/h

The Bitzer Compressor is high quality!

Displacement (1450 RPM 50Hz):101.10 / 50.50 m^3/h

Displacement (1750 RPM 60Hz):122.02 / 60.95 m^3/h

No. of cylinder x bore LP/HP x stroke:6+6 x 82/ 82 mm x 55 mm

Max. pressure (LP/MP/HP):19 / 19 / 28 bar

Connection suction line:42 mm – 1 5/8 inch

Connection discharge line:35 mm – 1 3/8 inch

Oil type R404A/R507A:BSE32 (Standard)

Oil type R448A/R449A:BSE32 (Standard)

Oil type R22:B5.2 (Option) We can also provide the following models

4JTE-15K

GYD80485VAYB4

GED60235VLB332

GMD60137VBYR632

GED60485VBYR3-1

CSH7573-70Y-40P

GYD80182VLYB632

GYD60385VLYR2-2

GED80154VLR332

GYU80295VLR4-2

GSU60120VLB6-2

GED60137VAYB3-1

GUU60154VLR532

GUD80295VLR232

GSD80295VLR6-1

GTU60137VLYB3-1

GUD60137VBYR5-1

GYD80235VBYB332

GYD60421VAYR332

GMD60295VBR3-1

GED80154VBYB6

4NEH-14-40S

GMU60154VLY

GYD60154VAB4-2

GYD80182VAYR4-2

GYD80421VBR5-1

GYD60385VLYR4-1

4TE-9.F3Y-40S

GMD60182VBYB3-2

GMD80120VLR232
GUD60120VBYR5-2
GSD60154VAYR232
GMD60154VBYR632
44EES-12-40S
GMD60154VBB432
GUD80421VWR4-2
GYD80385VAYR2-2
GTD60385VLB632
GED60235VLB2
GED60154VAYR4
GSD80421VWR5-2
GUD60421VBR5
GYD80182VBYB5-1
GED60295VBB5
GED80421VAR4-1
GED60385VLYB3
GYU80421VLR2
GSD80485VBB5-1
GED60120VLB2
GUD60421VBR332
GTD60154VAB4-2
GED60421VAYB6-1
GMD60485VBB5-1
GSD60485VAYR4
GED80295VLYR6-1
GSD60235VAYB232
GTD60385VBYR3-1
GUD60154VBB3-2
GUD80295VWB6-2
GED60421VAR5
GMD80421VBR4
GED80182VLR532
GSD60154VBYB6-1
GTD80421VBYR332
GSD60182VAYB4-1
GUD80485VWYR5-2
GSU80295VLYR6-1
GSD80182VLYR2-2
GSU80385VLB432
GED80295VAY
GED80295VAB3-2
GYD60120VAR4

With liquid subcooling 50Hz (R404A/R507A)

Compressor type	Cond.temp.	Qo / Pe	Evaporating temperature °C									
[°C]	-25	-30	-35	-40	-45	-50	-55	-60	-65	-70		
S6F-30.2Y	30	Qo	43400	37400	31750	26500	21700	17420	13690	10540	7920	5800

Pe	2,53	0,65	8,78	16,94	15,15	13,42	11,77	10,20	8,74	7,40
35	Qo	42500	36600	31050	25900	21200	17030	13420	10340	7780	5680
Pe	3,85	1,86	9,89	7,94	6,04	4,21	12,45	10,78	9,23	7,80
40	Qo	41500	35700	30300	25300	20700	16680	13170	10150	7590
Pe	25,20	23,10	21,01	18,96	16,95	15,00	13,14	11,37	9,72
45	Qo	40450	34800	29550	24700	20300	1660	12930	9920
Pe	26,59	24,37	22,16	19,98	17,86	15,80	13,83	11,96
50	Qo	39500	34000	28850	24100	19870	16060	12650
Pe	28,07	25,69	23,33	21,01	18,75	6,57	14,49
55	Qo	38800	33250	28200	23600	19490	15740
Pe	29,64	27,06	24,51	22,03	19,63	17,32

Qo – Cooling capacity [Watt], Pe – Power consumption [kW]

Without liquid subcooling 50Hz (R404A/R507A)

Compressor type	Cond.temp.	Qo / Pe	Evaporating temperature °C								
[°C]	-25	-30	-35	-40	-45	-50	-55	-60	-65	-70	
S6F-30.2Y	30	Qo	38050	31700	26050	21000	16620	12880	9790	7280	5300	3760
Pe	1,26	18,81	16,61	14,64	12,90	11,37	10,02	8,86	7,85	7,00
35	Qo	36000	29950	24500	19710	15570	12070	9180	6840	4980	3510
Pe	22,11	19,66	17,41	15,37	13,53	11,88	10,42	9,13	8,02	5,72
40	Qo	33800	28000	22900	18390	14530	11280	8590	6400	4620
Pe	22,95	20,53	18,26	16,15	14,20	12,42	10,82	9,41	8,18
45	Qo	31450	26050	21250	17080	13510	10500	8000	5920
Pe	23,82	21,42	19,12	16,94	14,89	13,00	11,26	9,71
50	Qo	28950	24000	19590	15770	12490	9710	7370
Pe	24,72	22,31	19,98	17,74	15,61	13,61	11,76
55	Qo	26400	21900	17890	14430	11440	8880
Pe	25,67	23,19	20,80	18,52	16,34	14,27

Qo – Cooling capacity [Watt], Pe – Power consumption [kW]

Private Picture Copyright : WWW.MBSM.PRO

Private Picture Copyright : WWW.MBSM.PRO

Mbsm_dot_pro_private_PDF_S6F-30.2Y-40PTélécharger

Compressor typeDisplacement at 1450 min-1Number of cylindersOil chargeWeightPipe connectionsMotorMax. operating currentMax. power consumptionStarting

current(lockedrotor)LPHPDLSLdm3KgmmpoucemmpouceAmpkWAmp.
Y/YYS6F-30.2Y101,150,567.752343513/842
5415/8
21/8380 ..420YY/3/50
440 ..480 YY/3/605131,9135/220

Panasonic, DGH73C14RAX, R134a, D Series, Reciprocating, Fixed, Speed, LBP, 1/4Hp

Category: compressor
written by www.mbsm.pro | 15 December 2021

https://www.mbsm.pro/wp-content/uploads/2021/01/Mbsm_dot_pro_private_PDF_Qb77c16glx5.pdf

Item	Performance characteristics
Refrigerant	R134a
Displacement (cm³)	7.3

Item	Performance characteristics
Voltage (V)	220
Frequency (Hz)	50
Motor Type	RSCR
Capacity@ASHRAE	215
COP@ASHRAE	1.6
Capacity@CECOMAF	—
COP@CECOMAF	

Private Picture Copyright : WWW.MBSM.PRO

				RSCR	215	1.58	-	-
DGH	DGH57C79RAU	5.7	115V 60Hz	RSIR	-	-	-	-
				RSCR	212	1.63	-	-
	DGH66C12RAR	6.6	110/127V 60Hz	RSIR	-	-	-	-
				RSCR	251 / 251	1.62 / 1.60	-	-
	DGH66C13GAX	6.6	220V 50Hz	RSIR	189	1.42	-	-
				RSCR	-	-	-	-
	DGH66C15RLP	6.6	220V 60Hz	RSIR	-	-	-	-
				RSCR	251	1.45	-	-
	DGH66C16RAP	6.6	220V 60Hz	RSIR	-	-	-	-
				RSCR	251	1.60	-	-
	DGH66C94RAU	6.6	115V 60Hz	RSIR	-	-	-	-
				RSCR	238	1.68	-	-
	DGH66C96RAW	6.6	220/240V 50Hz	RSIR	-	-	-	-
				RSCR	190 / 190	1.60 / 1.58	-	-
	DGH73C14RAE	7.3	220V 50/60Hz	RSIR	-	-	-	-
				RSCR	215 / 270	1.55 / 1.60	-	-
	DGH73C15GAX	7.3	220V 50Hz	RSIR	215	1.45	-	-
				RSCR	-	-	-	-
	DGH73C15RAX	7.3	220V 50Hz	RSIR	-	-	-	-
				RSCR	215	1.60	-	-
	DGH77C13RAW	7.7	220/240V 50Hz	RSIR	-	-	-	-

www.mbsm.pro
Private Picture Copyright : WWW.MBSM.PRO

Mbsm_dot_pro_private_PDF_panasonic-compressor-Serie-DTélécharger

---

KONOR, COMPRESSOR, GQR80AA, R134A, LBP, 240V, 50Hz, 8.1cm3, 1/4HP, 198W, -KONOR CATALOGE pdf

Category: compressor
written by www.mbsm.pro | 15 December 2021

GQR80AA 8.1cm3 186MM RSIR 198W 1.19W/W 220-240V/50Hz 1/4HP 9.4Kg

KONOR COMPRESSORGQR80AA R134A LBP 240V 50Hz

Product description:

R134a GQR80AA **series sealed refrigeration compressor 220-240v/50Hz**
The main feature:
strong loading capacity,
high efficiency,
low noise,
light vibration,
good reliability.
suitable for mid-size refrigerators, freezers, displayers, beer displayers and other mid-size refrigeration appliances. The structure form is hermetical crank connecting-rod reciprocating piston type.
They are the best selling high-tech compressors sold in the world. They are ideal for domestic refrigeration and also for small commercial applications. They are small, have low noise and vibration levels, they achieve the highest levels of efficiency available in the market for this category.

KONOR	Displ. power	Motor type	V/Hz	Cooling capacity	W Net	Weight	KG
GQR60AA	61/6	RSIR	220-240V/50Hz		140		9.4
GQR70AA	6.61/5	RSIR	220-240V/50Hz		165		9.4
GQR80AA	8.11/4	RSIR	220-240V/50Hz		198		9.4
GQR90AA	9.11/4	RSIR	220-240V/50Hz		220		10.1
GQY99AA	9.91/4	RSIR	220-240V/50Hz		270		10.9
GQY12AF	11.81/3	CSIR	220-240V/50Hz		325		10.56
GQY16AF	16.23/8	CSIR	220-240V/50Hz		380		12.1
GP16MG	16.25/8	CSIR	220-240V/50Hz		870		12.5
GP12MG	11.85/8	CSIR	220-240V/50Hz		656		10.9
GP12TG	11.83/8	CSIR	220-240V/50Hz		1140		11.8
GQR80TG	8.11/4	CSIR	220-240V/50Hz		730		9.8
GQR90TG	9.11/4	CSIR	220-240V/50Hz		830		10.5
GQR60TG	61/5	CSIR	220-240V/50Hz		520		9.8

One year warranty*.

Mbsm_dot_pro_private_PDF_2017-KONOR-CATALOGETélécharger

KONOR Compressor GQR80AA

Private Picture Copyright : WWW.MBSM.PRO

Private Picture Copyright : WWW.MBSM.PRO

GP14TB, R-134a, 3/8HP++, 230V, Haute Pression, CUBIGEL/HUAYI, Décalage: 14.17 cm³

Category: compressor
written by www.mbsm.pro | 15 December 2021

- **CUBIGEL/HUAYI**
- **Original**

Données techniques

- Modèle: **GP14TB**
- Gaz: **R-134a**
- Température/Pression: **Haute Pression**
- Puissance: **3/8 HP**
- Type De Courant: **Monophasé**
- Fréquence: **50 Hz**
- Type De Compresseur: **Hermétique**
- Décalage: **14.17 cm³**
- Cons.Énergie -10ºC: **366 W**
- Cons.Énergie -5ºC: **406 W**
- Cons.Énergie 0ºC: **448 W**
- Cons.Énergie +5ºC: **491 W**
- Cons.Énergie +10ºC: **536 W**
- T° De Condensation: **40 °C**
- Capacidad Frigorífica -15°C: **489 Kcal/h**
- Capacidad Frigorífica -10°C: **634 Kcal/h**
- Capacidad Frigorífica -5°C: **800 Kcal/h**
- Capacidad Frigorífica 0°C: **986 Kcal/h**
- Capacidad Frigorífica 5°C: **1193 Kcal/h**
- Capacidad Frigorífica 7.2°C: **1291 Kcal/h**
- Capacidad Frigorífica 10°C: **1421 Kcal/h**
- Tipo Test: **Ashare 46**

Private Picture Copyright : WWW.MBSM.PRO

3070051	alternative part number	605011	رقم القطعة
GP14TB	type	R134a	refrigerant
W 566	power input	HP 3/8	power
CSIR	motor system	cm³ 14	cylinder capacity
mm 203.6	height	V 220-240	voltage
W 643	power at -5°C	W 497	power at -10°C
W 999	power at +5°C	W 810	power at 0°C
W 271	power at -20°C	W 191	power at -25°C
W 1209	power at +10°C	W 373	power at -15°C
HMBP	application	ASHRAE	test method
C° 43	.ambient temperature max	Hz 50	frequency
		kg 11.5	weight

www.mbsm.pro

Private Picture Copyright : WWW.MBSM.PRO

Mbsm_dot_pro_private_PDF_gp14tb-3Télécharger

Mbsm_dot_pro_private_PDF_gp14tb-1Télécharger
Mbsm_dot_pro_private_PDF_gp14tbTélécharger

Cold room, Copeland, ZR scroll, compressor, ZR144KCE-TFD-550, 12HP Copeland Scroll Compressor, Hermetic Compressor Specifications

Category: compressor
written by www.mbsm.pro | 15 December 2021

Model	Horse Power (HP)	Cooling capacity(w)	InputPower(kw)	Current (A)	Bottom corner size(mm)	Weight(KG)
ZR144KC-TFD-550	12	34730	10.87	19.6	190	63

Private Picture Copyright : WWW.MBSM.PRO

Type: Hermetic scroll compressorsProducer: CopelandSeries: ZR
Model: ZR144KCE-TFD
Technical data

Displacement [m³/h]:	33,2
Sound power [dBA]:	75
Sound pressure level [dB]:	64
Net Weight [kg]:	61,2
Gross Weight [kg]:	72
Oil charge [dm³]:	3,3
Maximum high pressure [bar]:	32
Maximum standstill pressure [bar]:	20
Minimal lowside temperature [°C]:	-35
Maximum lowside temperature [°C]:	52
PED category:	2

Electrical data

Power supply [V/~/Hz]:	380-420/3/50Hz
Locked rotor current [A]:	118
Max. operating current [A]:	22,3
Winding resistance [Ω]:	1,2

Connections

inches

Suction connection with supplied sleeve: 1 3/8″
Discharge connection with supplied sleeve: 7/8″
Compressor Copeland Scroll ZR144KCE-TFD-425, R407C, 380-420V
Type of engine: TFD
Displacement: 33.2 m3 / h (191,23 cm3)
Cooling capacity (0 ° C): 20.00 kW.
Oil quantity: 3.38 L.
Noise level: 61 dBA – 1 m.
Max. Noise level: 75 dBA.
Max. Operating current (FLA): 22.3 A.
LRA: 118.0 A.
Connectors: 1.3 / 8 “x 7/8”.
Dimensions (LxWxH): 264x285x533 mm
Net Weight: 61.2 kg

Shipping Class	Standard
Scope Of Application	HBP
Lieferzeit	Ca. 10-14 Tage
Type Of Construction	Scroll
Maker	Copeland
Manufacturer No.	ZR144KCE-TFD-425
Style	1
Refrigerants	R407C
Series	ZR
Condensing Units Compressors	Compressors
Suspense	380-420V
Weight In Kg	61

Model	Horse Power (HP)	Cooling capacity(w)	InputPower(kw)	Current (A)	Bottom corner size(mm)	Weight(KG)
ZR144KC-TFD-550	12	34730	10.87	19.6	190	63

www.mbsm.pro
Private Picture Copyright : WWW.MBSM.PRO

Private Picture Copyright : WWW.MBSM.PRO

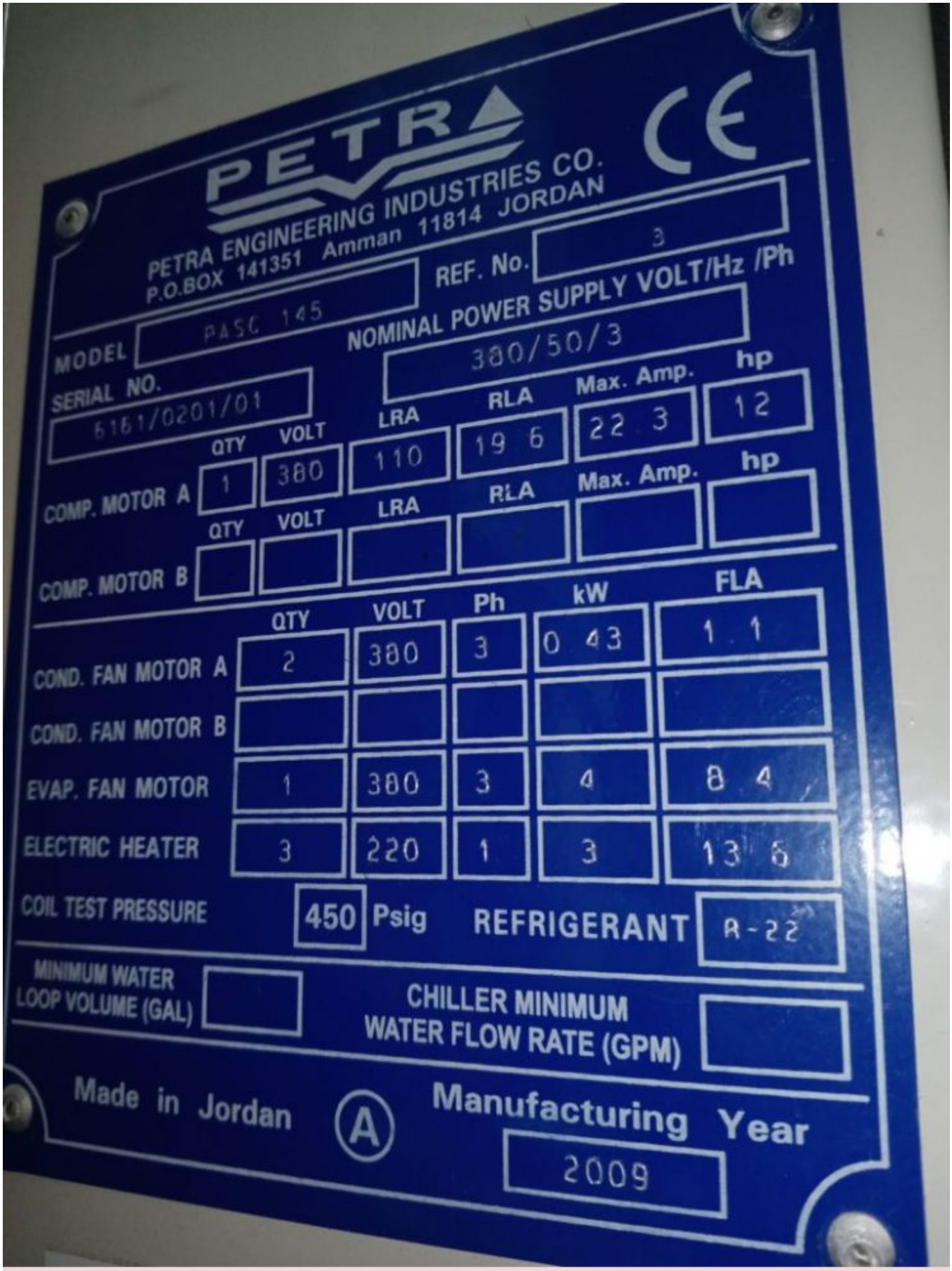

Private Picture Copyright : WWW.MBSM.PRO
Mbsm_dot_pro_private_PDFZR144KCE-TFD-1Télécharger
Mbsm_dot_pro_private_PDF_ZR144KCE-TFD-550Télécharger

COMPRESSoR, DANFOSS, NL8.4MF, R134A, 1/4HP, 8.35CM3, Compressor Danfoss Secop NL8.4MF, 105G6879, MBP -R134a, 220-240V/1/50Hz, discharge 8.35 cm3, motor type RSIR / CSIR, oil type POE, oil charge 320 cm3, 741 W at +7.2 / +55° C, LRA 11.7 A, maximum refrigerant charge 600 g, height: 197 mm, weight 10.5 kg

Category: compressor
written by www.mbsm.pro | 15 December 2021

230V 50/60HZ

FICHE TECHNIQUE COMPRESSEUR DANFOSS NL8.4MF AU R134A 1/4HP 8.35CM3

Puissance HP	1/4
Tension (V)	230
Fréquence (Hz)	50/60
Marque pie	DANFOSS
Cylindré	8.35
Référence marque	NL8.4MF

R134a	refrigerant	605089	رقم القطعة
HP 1/4	power	NL8.4MF	type
RSIR/CSIR	motor system	cm³ 8.35	cylinder capacity
W 491	power at -5°C	W 390	power at -10°C
W 749	power at +5°C	W 610	power at 0°C
W 235	power at -20°C	W -	power at -25°C
W 912	power at +10°C	W 305	power at -15°C
HMBP	application	ASHRAE	test method
Hz 50	frequency	kg 10.5	weight
mm 197	height	V 220-240	voltage

Private Picture Copyright : WWW.MBSM.PRO

Mbsm_dot_pro_private_PDF_NL8.4MFTélécharger

SC18G, 104G8820, Universal, Compressor, R134a, 220-240V 50/60Hz, DANFOSS, SECOP, R134a, HMBP, 1/2 Hp++, displacement 17.70 cc, CSIR, SC18G 104G8820

Category: compressor
written by www.mbsm.pro | 15 December 2021

Compresseur Danfoss SC18G - R134a

Cylindrée = 17.69 CM3

APPLICATIONS = HP; BP; MP

Moteur = CSIR

220-240V 50/60Hz

Design

Displacement	cm³	17.69
Oil quantity	cm³	600 (550 on comp. with oil cooler)
Maximum refrigerant charge	g	1300
Free gas vol. in compressor	cm³	1460
Weight without electrical equipment	kg	13.7

Motor

Motor size	watt	495
LRA (rated after 4 sec. UL984) HST	A	18.6
Cut-in current HST	A	18.6
Resistance, main and start winding (25°C)	Ω	3.7/14.1
Approvals		EN 60335-2-34, CCIB

Dimensions 104G8830 104G8820 104G8822

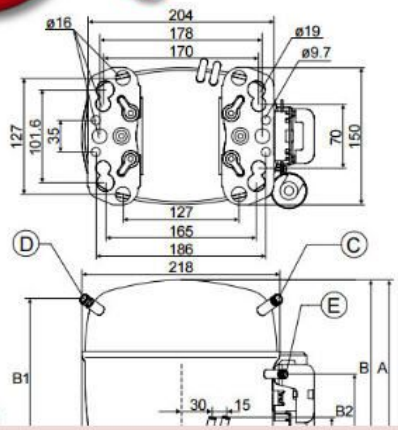

Private Picture Copyright : WWW.MBSM.PRO

Détails du produit

Poids brut 13.8 kg

Poids Net 13.8 kg

Applications	HBP LBP MBP
Charge en fluide frigorigène [kg] [Max]	1.3 kg
Charge en huile [L]	600 L
Code de configuration	Simple
Couleur	Noir
Courant d’appel HST [A]	18.6 A
Description	SC18G
Diamètre de raccordement à l’aspiration [mm]	10.2 mm
Diamètre du raccord au refoulement [mm]	6.2 mm
Diamètre du raccordement du traitement [mm]	6.2 mm
Désignation du modèle	Compresseur
Emballage (format)	Emballage industriel
Faible valeur de plage de tension à 50 Hz [V]	187 V
Faible valeur de plage de tension à 60 Hz [V]	198 V
Faible valeur de tension nominale à 50 Hz [V]	208 V
Faible valeur de tension nominale à 60 Hz [V]	220 V
Fluides	R134a
Fréquence [Hz]	50/60
Hauteur de la base [mm]	213 mm
Hauteur du raccordement de refoulement [mm]	110 mm
Hauteur raccordement aspiration [mm]	193 mm
Hauteur totale [mm]	219 mm
LRA HST [A]	18.6 A
Matériel du raccord au process	Acier cuivré
Matériel du raccord d’aspiration	Acier cuivré
Matériel du raccord de refoulement	Acier cuivré
Niveau d’énergie de l’application	Compresseur universel
Nombre de phases (compresseur)	1
Nombre de phases (ventilateur)	1
Norme d’approbation	CE EN 60335-2-34 avec Annexe AA
Notes concernant le raccord de refoulement	Capuchon en aluminium
Notes concernant le raccordement au process	Capuchon en aluminium
Notes concernant le raccordement à l’aspiration	Capuchon en aluminium
N° de modèle	SC18G
N° de schéma	8258
Oil type	POE
Phase	1
Puissance frigorifique nominale 60 kBTU/h	6.06 kBtu/h
Puissance frigorifique nominale à 60 Hz	1.8 kW
Quantité d’huile [cm³]	600 cm³
Quantité par emballage	80
raccord de refoulement équerre [°]	37 °

raccord d’aspiration équerre [°]	37 °
Raccordement de process équerre	37 °
Régulation de la puissance	Vitesse fixe
Résistance de l’enroulement auxiliaire (enroulement de démarrage) pour compresseurs monophasés [ohm]	14.1 Ohm
Résistance de l’enroulement principal pour compresseurs monophasés [Ohm]	3.7 Ohm
Technique de la marque	Compresseur à pistons
Technologie	Piston
Température d’enroulement max. continue [°C] [Max]	125 °C
Température de l’enroulement à court terme [°C] [Max]	135 °C
Tension 50 Hz [V]	220 V
Tension 50 Hz [V] [max.]	240 V
Tension 60 Hz [V]	220 V
Tension 60 Hz [V] [max.]	240 V
Type	SC
Type de moteur	CSIR
Type de socle	Universel
Utilisation de tronçon	Réfrigération LT Réfrigération MT
Valeur du condensateur A	10 µF
Valeur du condensateur B	80 uF
Valeur élevée de plage de tension à 50 Hz [V]	254 V
Valeur élevée de plage de tension à 60 Hz [V]	254 V
Valeur élevée de tension nominale à 50 Hz [V]	230 V
Valeur élevée de tension nominale à 60 Hz [V]	230 V
Vitesse de rotation à 50 Hz [rpm]	2900 rpm
Vitesse de rotation à 60 Hz [rpm]	3500 rpm
Volume balayé [cm³]	17.69 cm³
Volume de gaz libre [cm3]	1460 cm³
Économiseur	No

Documents

Type de document	Country	Langue	Titre
Catalogue Fiche technique Warranty Matériel promotionnel Guide d’installation EAC Declaration Brochure Article UA Declaration Manuel d’utilisation Electrical Safety Certificate	France Afrique du Sud Allemagne Australie Autriche Belarus Belgique Brazil Bulgarie Canada Chili Chine (continentale) Colombie Corée du Sud Croatie Danemark Emir.arab.unis Espagne Estonia Finlande Grande Bretagne Grèce Hongrie Inde + Sikkim Indonésie Ireland Islande Israël Italie Japon Kazakhstan Lettonie Lithuania Macedonia Malaisie Mexique N. Zélande Norvège Pays-Bas Philippines Pologne Portugal Roumanie Russian Federation Rép. tchèque Saudi Arabia Serbia Singapour Slovaquie Slovénie Suisse Suède Taiwan, Chine Thailand Tunisie Turquie Ukraine USA Viêt Nam Vénézuéla	Français Allemand Anglais Arabe Bulgare Chinois Coréen Croate Danois Espagnol Estonien Finnois Grec Hindi Hongrois Hébreu Indonésien Islandais Italien Japonais Kazakh Letton Lituanien Norvégien Néerlandais Polonais Portugais Roumain Russe Serbe Slovaque Slovène Suédois Tchèque Thaï Turc Ukrainien Vietnamien	
Fiche technique	France	Français	**220V Hermetic Compressors – R12 – R22 – R205** AI32443441788901-FR0101 1984 KB
Fiche technique	France	Français	**Listing Compresseur Secop** AI302136056984fr-FR0101 253 KB
Guide d’installation	France	Français	**Instructions SC Compressors (external Protector)** AN00008643706001-000401 124 KB
Guide d’installation	France	Français	**Instructions SC Twin Compressors** AN00008643707201-000101 183 KB

Type de document Catalogue Fiche technique Warranty Matériel promotionnel Guide d’installation EAC Declaration Brochure Article UA Declaration Manuel d’utilisation Electrical Safety Certificate	Country France Afrique du Sud Allemagne Australie Autriche Belarus Belgique Brazil Bulgarie Canada Chili Chine (continentale) Colombie Corée du Sud Croatie Danemark Emir.arab.unis Espagne Estonia Finlande Grande Bretagne Grèce Hongrie Inde + Sikkim Indonésie Ireland Islande Israël Italie Japon Kazakhstan Lettonie Lithuania Macedonia Malaisie Mexique N. Zélande Norvège Pays-Bas Philippines Pologne Portugal Roumanie Russian Federation Rép. tchèque Saudi Arabia Serbia Singapour Slovaquie Slovénie Suisse Suède Taiwan, Chine Thailand Tunisie Turquie Ukraine USA Viêt Nam Vénézuéla	Langue Français Allemand Anglais Arabe Bulgare Chinois Coréen Croate Danois Espagnol Estonien Finnois Grec Hindi Hongrois Hébreu Indonésien Islandais Italien Japonais Kazakh Letton Lituanien Norvégien Néerlandais Polonais Portugais Roumain Russe Serbe Slovaque Slovène Suédois Tchèque Thaï Turc Ukrainien Vietnamien	Titre
Matériel promotionnel	France	Français	**Refrigerant Circuit** AV00008642183800-000402 463 KB

Compresseur Danfoss SC18G - R134a

Cylindrée = 17.69 CM3

APPLICATIONS = HP; BP; MP

Moteur = CSIR

220-240V 50/60Hz

Design

Displacement	cm³	17.69
Oil quantity	cm³	600 (550 on comp. with oil cooler)
Maximum refrigerant charge	g	1300
Free gas vol. in compressor	cm³	1460
Weight without electrical equipment	kg	13.7

Motor

Motor size	watt	495
LRA (rated after 4 sec. UL984) HST	A	18.6
Cut-in current HST	A	18.6
Resistance, main and start winding (25°C)	Ω	3.7/14.1
Approvals		EN 60335-2-34, CCIB

Dimensions **104G8830** **104G8820** **104G8822**

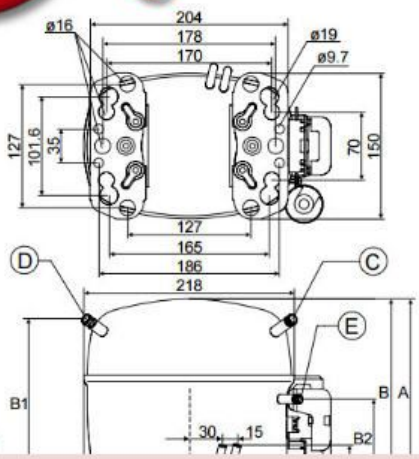

Private Picture Copyright : WWW.MBSM.PRO

R134a	refrigerant	605076	رقم القطعة
HP 1/2	power	SC18G	type
cm³ 17.7	cylinder capacity	W 495	power input
V 220-240	voltage	CSIR	motor system
W 844	power at -10°C	mm 219	height
W 1343	power at 0°C	W 1074	power at -5°C
W -	power at -30°C	W 1655	power at +5°C
W 485	power at -20°C	W 348	power at -25°C
W 2014	power at +10°C	W 649	power at -15°C
HMBP	application	ASHRAE	test method
kg 13.7	weight	Hz 50	frequency

Private Picture Copyright : WWW.MBSM.PRO

Visuels

Mbsm_dot_pro_private_PDF_SC18GTélécharger

Donper, Refrigeration, Compressr, r134A, freezer, LU140CY1, CT6220CE, AK120CY1, 1/3Hp-

Category: compressor
written by www.mbsm.pro | 15 December 2021

Product Description

Donper Refrigeration Compressr r134A

– Famous and Popular Compressors

– D series hermetic compresors for R134A mainly are designed for applications in water dispenser, small freezer. The main characteristics of D series are light weight, compact size, high reliability, low noise and low vibration.

– R134A S series hermetic compressor mainly are designed for applications in water dispenser, small refrigerator, small freezer. The main characteristics of S series are light weight and compact size, reliability, low noise and high low vibration. By the optimal design of the suspension system and the continuous curvarure design of its housing, low operating vibration and sound levels have been achieved.

R600a Series

Refrige-rant	Applica-tion	Model	Series	Power	Cooling	Motor type	Power supply	Cooling capacity	COP W/W		
*ASHRAE -23.3	*CECOMAF -25	*ASHRAE -23.3	*CECOMAF -25								
R600a	LBP	W40CY	IN	1/14	S	hatch	220/50	55	43	0.9	0.75
R600a	LBP	S53CY	S	1/10	S	hatch	220/50	75	57	1.2	0.95
R600a	LBP	S65CY	S	1/8	S	hatch	220/50	95	72	1.2	0.95
R600a	LBP	S75CY	S	1/7	S	hatch	220/50	118	86	1.2	0.95
R600a	LBP	SK53CY	S	1/10	S	RSCR	220/50	75	57	1.3	1.03

R600a	LBP	L76CY	L	1/6	S	hatch	220/50	132	100	1.36	1.07
R600a	LBP	L88CY	L	1/5	S	hatch	220/50	153	116	1.36	1.07
R600a	LBP	QD60AY	NOT	1/7	S	hatch	100/60	125	95	1.35	1.07
R600a	LBP	QD76Y	NOT	1/6	S	hatch	220/50	132	100	1.36	1.07
R600a	LBP	QD88Y	NOT	1/5	S	hatch	220/50	153	116	1.36	1.07
R600a	LBP	QD100Y	NOT	1/5 +	S	hatch	220/50	170	129	1.38	1.09
R600a	LBP	QD123Y	NOT	1/4	S	hatch	220/50	187	142	1.38	1.09
R600a	LBP	LK88CY	L	1/5 +	S	RSCR	220/50	160	122	1.58	1.25
R600a	LBP	QD100YG	NOT	1/4 +	S	RSCR	220/50	180	137	1.58	1.25
R600a	LBP	QD135YG	NOT	1/4 +	S	RSCR	220/50	215	163	1.58	1.23
R600a	LBP	QD153YG	NOT	1/4 +	S	RSCR	220/50	246	184	1.58	1.23
R600a	LBP	LU68CY	L	1/7	S	RSCR	220/50	120	91	1.56	1.22
R600a	LBP	QD68YU	NOT	1/7	S	RSCR	220/50	120	91	1.56	1.22
R600a	LBP	QD76YU	NOT	1/6	S	RSCR	220/50	140	106	1.65	1.3
R600a	LBP	QD88YU	NOT	1/5	S	RSCR	220/50	160	122	1.68	1.33
R600a	LBP	QD100YU	NOT	1/4	S	RSCR	220/50	180	137	1.7	1.34
R600a	LBP	QD123YU	NOT	1/4	S	RSCR	220/50	196	150	1.68	1.3
R600a	LBP	QD135YU	NOT	1/4 +	S	RSCR	220/50	220	168	1.68	1.3
R600a	LBP	QD153YU	NOT	1/4 +	S	RSCR	220/50	248	189	1.65	1.28
R600a	LBP	QD68YZ	NOT	1/6	S	RSCR	220/50	120	91	1.8	1.42
R600a	LBP	QD76YZ	NOT	1/6	S	RSCR	220/50	140	106	1.8	1.42
R600a	LBP	QD88YZ	NOT	1/5 +	S	RSCR	220/50	165	125	1.8	1.42
R600a	LBP	QD100YZ	NOT	1/4 +	S	RSCR	220/50	185	141	1.8	1.42
R600a	LBP	QD135YZ	NOT	1/3-	S	RSCR	220/50	220	168	1.8	1.42
R600a	LBP	QD60YT	NOT	1/8	S	ESCR	220/50	106	81	1.88	1.48
R600a	LBP	QD68YT	NOT	1/7	S	ESCR	220/50	126	96	1.9	1.5
R600a	LBP	QD76YT	NOT	1/6	S	ESCR	220/50	146	111	1.94	1.53
R600a	LBP	LU68PY	L	1/7	S	BLDC	220/50	120	91	1.65	1.3
R600a	LBP	LU68PY	L	1/5	S	BLDC	220/50	160	122	1.65	1.3

Model no	L140CY1	**Refrigerant**	R600a
Cooling capicity	230W	**Input power**	170W
Hose Power	1/3- HP	**Temperature application**	LBP
Displacement	14cm³	**Working Current**	1.3A
Voltage	220V~240V/50Hz	**COP**	1.35W/W
Motor type	RSIR	**Cylinder capacity**	14cm³
Cooling type	Need a fan motor	**Weight**	8.6±0.4kg

Private Picture Copyright : WWW.MBSM.PRO

Quick Details

Condition:	New	Applicable Industries:	Hotels, Restaurant, Home Use, Food Shop, Food & Beverage...
Showroom Location:	None	Video outgoing-inspection:	Not Available
Machinery Test Report:	Not Available	Marketing Type:	Ordinary Product
		Place of Origin:	Hubei, China
Brand Name:	Dongbei/OEM	Type:	Refrigeration Compressor
Application:	Refrigeration Parts	Warranty:	1 year
Product name:	R600a 1/3 hp Refrigeration Commercial Freezer Compressor	Refrigerant:	R600a
Voltage:	220V~240V/50HZ	Horse Power:	1/3
Cooling capacity:	230W	Input power:	170W
Cylinder capacity:	14 Cubic Centimetre	Working current:	1.3A
Motor Type:	RSIR	Weight:	8.6±0.4kg
After Warranty Service:	Online support	Local Service Location:	None
Certification:	CCC/VDE	After-sales Service Provided:	Online support

www.mbsm.pro

Private Picture Copyright : WWW.MBSM.PRO

COOLING CAPICITY	230W
REFRIGERANTS	R600a
INPUT POWER	170W
HORSE POWER	1/3-
DISPLACEMENT	14cm³

Model no	L140CY1	**Refrigerant**	R600a
Cooling capicity	230W	**Input power**	170W
Hose Power	1/3- HP	**Temperature application**	LBP
Displacement	14cm³	**Working Current**	1.3A
Voltage	220V~240V/50Hz	**COP**	1.35W/W
Motor type	RSIR	**Cylinder capacity**	14cm³
Cooling type	Need a fan motor	**Weight**	8.6±0.4kg

Private Picture Copyright : WWW.MBSM.PRO

PDF

Compressor, hermetic, medium temperature, 7 HP, r22, POE, MT80HP4, MT80 HP4, 400/3/50, 460/3/60 volt, 1-3/4″ RL – 1-1/8″ x 1-1/4″ RL – 3/4″

Category: compressor
written by www.mbsm.pro | 15 December 2021

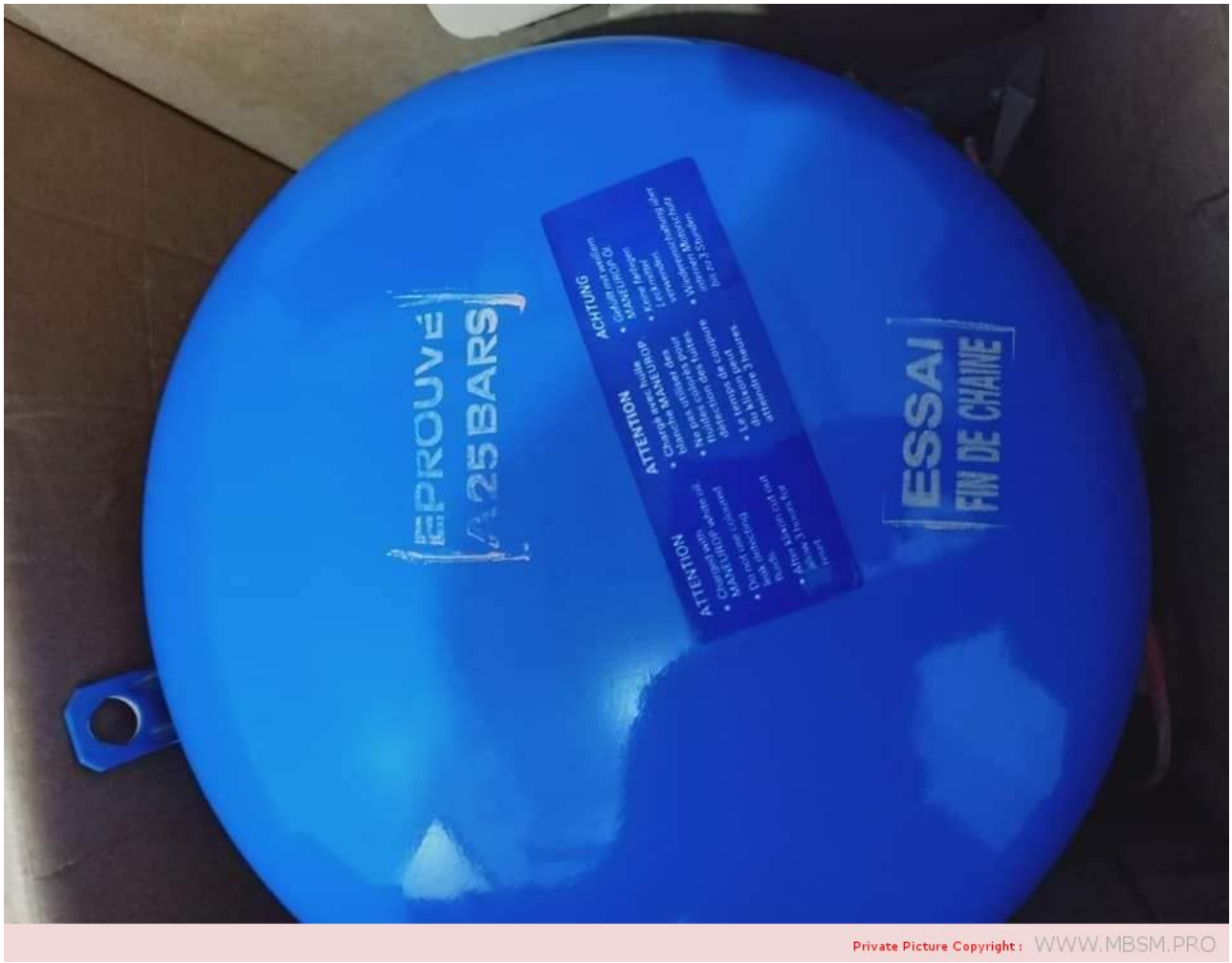

Product details

Gross weight 41.58 kg
Net weight 39.1 kg
EAN 5702428839525

Approval standard	CE UL
Brand technique	Reciprocating compressor
Capacity control	Fixed speed
Colour	Blue
Compressor power supply [V/Ph/Hz]	400/3/50 460/3/60
Configuration code	Single
Connection type	Rotolock
Cylinder	2
Description	MT080-4
Diameter [mm]	288 mm
Discharge connection height [mm]	74 mm
Discharge connection mounting torque [Nm]	90 Nm
Discharge connection pipe size [in]	3/4 in

Discharge connection rotolock size [in]	1 1/4 in
Discharge connection size [in]	1 1/4 in
Discharge connection sleeve pipe size [in]	3/4 in
Drawing number	8502012g
Economizer	No
Factory HP [bar]	25 bar
Factory LP [bar]	25 bar
Fitting remark	(shipped with rotolock version only)
Fitting sleeve	ODF
Fitting standard	Rotolock
Frequency [Hz]	50/60
Gauge port HP	None
Gauge port LP	Schrader
Generation code	B
Glass mounting	Threaded
Glass torque [Nm]	50 Nm
GP LP torque [Nm]	15 Nm
High side max pressure (Ps)	27.8 bar
High Side TS Max	150 °C
High Side TS Min	-35 °C
High Side Volume	0.6 L
High value of nominal voltage at 50Hz [V]	400 V
High value of nominal voltage at 60Hz [V]	460 V
High value of voltage range at 50Hz [V]	460 V
High value of voltage range at 60Hz [V]	506 V
IP protection class	IP55 (with cable gland)
Low side max pressure (Ps)	18.4 bar
Low Side TS Max	50 °C
Low Side TS Min	-35 °C
Low Side Volume	16.5 L
Low value of nominal voltage at 50Hz [V]	380 V
Low value of nominal voltage at 60Hz [V]	460 V
Low value of voltage range at 50Hz [V]	340 V
Low value of voltage range at 60Hz [V]	414 V
LRA	80 A
MCC	18 A
Model number	MT80HP4AVE
Motor protection	Internal overload protector
Mounting torque [Nm]	15 Nm
Nominal cooling capacity 60 kBTU/h	80.2 kBtu/h
Nominal cooling capacity at 50Hz	17.8 kW
Nominal cooling capacity at 60Hz	23.5 kW
Number of starts per hour [Max]	12
Oil charge [L]	1.8 L
Oil equalization	3/8” flare SAE
Oil equalization torque [Nm]	30 Nm

Oil reference	160P
Packaging height [mm]	455 mm
Packaging length [mm]	395 mm
Packaging weight [Kg]	44 kg
Packaging width [mm]	365 mm
Packing format	Single pack
Packing quantity	1
Phase	3
Power connections	Spade
Refrigerant	R22
Refrigerant charge [kg] [Max]	5 kg
Relief valve	30 bar/8 bar
Rotational speed at 50Hz [rpm]	2900 rpm
Rotational speed at 60Hz [rpm]	3500 rpm
Segment usage	Air conditioning Refrigeration MT
Shipped fittings	Suction and discharge solder sleeves, rotolock nuts and gaskets
Shipped instructions	Installation instructions
Shipped mounting	Mounting kit with grommets, bolts, nuts, sleeves and washers
Shipped oil	Initial oil charge
Suction connection height [mm]	265 mm
Suction connection mounting torque [Nm]	110 Nm
Suction connection pipe size [in]	1 1/8 in
Suction connection rotolock size [in]	1 3/4 in
Suction connection size [in]	1 3/4 in
Suction connection sleeve pipe size [in]	1 1/8 in
Swept volume [cm3]	135.78 cm^3
Technology	Reciprocating
Test dif [bar] [Max]	30 bar
Test HP [bar] [Max]	30 bar
Test LP [bar] [Max]	25 bar
Torque earth [Nm]	3 Nm
Torque power [Nm]	3 Nm
Total height [mm]	413 mm
Type	MT
Type designation	Compressor
Viscosity [cP]	32 cP
Winding resistance for three-phase compressors with identical windings [Ohm]	1.94 Ohm

Description

Product details

Gross weight	44.5 kg
Net weight	42 kg
EAN	5702428839525

Gross weight	44.5 kg
Net weight	42 kg
EAN	5702428839525

Approval standard	CE UL
Brand technique	Reciprocating compressor
Capacity control	Fixed speed
Colour	Blue
Compressor power supply [V/Ph/Hz]	400/3/50 460/3/60
Configuration code	Single
Connection type	Rotolock
Cylinder	2
Description	MT080-4
Diameter [mm]	288 mm
Discharge connection height [mm]	74 mm
Discharge connection mounting torque [Nm]	90 N-m
Discharge connection pipe size [in]	3/4 in
Discharge connection rotolock size [in]	1 1/4 in
Discharge connection size [in]	1 1/4 in
Discharge connection sleeve pipe size [in]	3/4 in
Drawing number	8502012g
Economizer	No
Factory HP [bar]	25 bar
Factory LP [bar]	25 bar
Fitting remark	(shipped with rotolock version only)
Fitting sleeve	ODF
Fitting standard	Rotolock
Frequency [Hz]	50/60
Gauge port HP	None
Gauge port LP	Schrader
Generation code	B
Glass mounting	Threaded
Glass torque [Nm]	50 N-m
GP LP torque [Nm]	15 N-m
High side max pressure (Ps)	27.8 bar
High Side TS Max	150 Â°C
High Side TS Min	-35 Â°C

High Side Volume	0.6 L
High value of nominal voltage at 50Hz [V]	400 V
High value of nominal voltage at 60Hz [V]	460 V
High value of voltage range at 50Hz [V]	460 V
High value of voltage range at 60Hz [V]	506 V
IP protection class	IP55 (with cable gland)
Low side max pressure (Ps)	18.4 bar
Low Side TS Max	50 Â°C
Low Side TS Min	-35 Â°C
Low Side Volume	16.5 L
Low value of nominal voltage at 50Hz [V]	380 V
Low value of nominal voltage at 60Hz [V]	460 V
Low value of voltage range at 50Hz [V]	340 V
Low value of voltage range at 60Hz [V]	414 V
LRA	80 A
MCC	18.5 A
Model number	MT80HP4AVE
Motor protection	Internal overload protector
Mounting torque [Nm]	15 N-m
Nominal cooling capacity 60 kBTU/h	80.2 kBtu/h
Nominal cooling capacity at 50Hz	17.8 kW
Nominal cooling capacity at 60Hz	23.5 kW
Number of starts per hour [Max]	12
Oil charge [L]	1.8 L
Oil equalization	3/8” flare SAE
Oil equalization torque [Nm]	30 N-m
Oil reference	160P
Packaging height [mm]	455 mm
Packaging length [mm]	395 mm
Packaging weight [Kg]	44 kg
Packaging width [mm]	365 mm
Packing format	Single pack
Packing quantity	1
Phase	3
Power connections	Spade
Refrigerant	R22
Refrigerant charge [kg] [Max]	5 kg
Relief valve	30 bar/8 bar
Rotational speed at 50Hz [rpm]	2900 rpm
Rotational speed at 60Hz [rpm]	3500 rpm
Segment usage	Air conditioning Refrigeration MT
Shipped fittings	Suction and discharge solder sleeves, rotolock nuts and gaskets
Shipped instructions	Installation instructions

Shipped mounting	Mounting kit with grommets, bolts, nuts, sleeves and washers
Shipped oil	Initial oil charge
Suction connection height [mm]	265 mm
Suction connection mounting torque [Nm]	110 N-m
Suction connection pipe size [in]	1 1/8 in
Suction connection rotolock size [in]	1 3/4 in
Suction connection size [in]	1 3/4 in
Suction connection sleeve pipe size [in]	1 1/8 in
Swept volume [cm3]	135.78 cm3
Technology	Reciprocating
Test dif [bar] [Max]	30 bar
Test HP [bar] [Max]	30 bar
Test LP [bar] [Max]	25 bar
Torque earth [Nm]	3 N-m
Torque power [Nm]	3 N-m
Total height [mm]	413 mm
Type	MT
Type designation	Compressor
Viscosity [cP]	32 cP
Winding resistance for three-phase compressors with identical windings [Ohm]	1.94 Ohm
Approval standard	CE UL
Brand technique	Reciprocating compressor
Capacity control	Fixed speed
Colour	Blue
Compressor power supply [V/Ph/Hz]	400/3/50 460/3/60
Configuration code	Single
Connection type	Rotolock
Cylinder	2
Description	MT080-4
Diameter [mm]	288 mm
Discharge connection height [mm]	74 mm
Discharge connection mounting torque [Nm]	90 N-m
Discharge connection pipe size [in]	3/4 in
Discharge connection rotolock size [in]	1 1/4 in
Discharge connection size [in]	1 1/4 in
Discharge connection sleeve pipe size [in]	3/4 in
Drawing number	8502012g
Economizer	No
Factory HP [bar]	25 bar
Factory LP [bar]	25 bar
Fitting remark	(shipped with rotolock version only)
Fitting sleeve	ODF

Fitting standard	Rotolock
Frequency [Hz]	50/60
Gauge port HP	None
Gauge port LP	Schrader
Generation code	B
Glass mounting	Threaded
Glass torque [Nm]	50 N-m
GP LP torque [Nm]	15 N-m
High side max pressure (Ps)	27.8 bar
High Side TS Max	150 Â°C
High Side TS Min	-35 Â°C
High Side Volume	0.6 L
High value of nominal voltage at 50Hz [V]	400 V
High value of nominal voltage at 60Hz [V]	460 V
High value of voltage range at 50Hz [V]	460 V
High value of voltage range at 60Hz [V]	506 V
IP protection class	IP55 (with cable gland)
Low side max pressure (Ps)	18.4 bar
Low Side TS Max	50 Â°C
Low Side TS Min	-35 Â°C
Low Side Volume	16.5 L
Low value of nominal voltage at 50Hz [V]	380 V
Low value of nominal voltage at 60Hz [V]	460 V
Low value of voltage range at 50Hz [V]	340 V
Low value of voltage range at 60Hz [V]	414 V
LRA	80 A
MCC	18.5 A
Model number	MT80HP4AVE
Motor protection	Internal overload protector
Mounting torque [Nm]	15 N-m
Nominal cooling capacity 60 kBTU/h	80.2 kBtu/h
Nominal cooling capacity at 50Hz	17.8 kW
Nominal cooling capacity at 60Hz	23.5 kW
Number of starts per hour [Max]	12
Oil charge [L]	1.8 L
Oil equalization	3/8” flare SAE
Oil equalization torque [Nm]	30 N-m
Oil reference	160P
Packaging height [mm]	455 mm
Packaging length [mm]	395 mm
Packaging weight [Kg]	44 kg
Packaging width [mm]	365 mm
Packing format	Single pack
Packing quantity	1
Phase	3
Power connections	Spade

Refrigerant	R22
Refrigerant charge [kg] [Max]	5 kg
Relief valve	30 bar/8 bar
Rotational speed at 50Hz [rpm]	2900 rpm
Rotational speed at 60Hz [rpm]	3500 rpm
Segment usage	Air conditioning Refrigeration MT
Shipped fittings	Suction and discharge solder sleeves, rotolock nuts and gaskets
Shipped instructions	Installation instructions
Shipped mounting	Mounting kit with grommets, bolts, nuts, sleeves and washers
Shipped oil	Initial oil charge
Suction connection height [mm]	265 mm
Suction connection mounting torque [Nm]	110 N-m
Suction connection pipe size [in]	1 1/8 in
Suction connection rotolock size [in]	1 3/4 in
Suction connection size [in]	1 3/4 in
Suction connection sleeve pipe size [in]	1 1/8 in
Swept volume [cm3]	135.78 cm3
Technology	Reciprocating
Test dif [bar] [Max]	30 bar
Test HP [bar] [Max]	30 bar
Test LP [bar] [Max]	25 bar
Torque earth [Nm]	3 N-m
Torque power [Nm]	3 N-m
Total height [mm]	413 mm
Type	MT
Type designation	Compressor
Viscosity [cP]	32 cP
Winding resistance for three-phase compressors with identical windings [Ohm]	1.94 Ohm

Refrigerant: R22, Segment usage: Air conditioning;Refrigeration MT, Compressor power supply [V/Ph/Hz]: 400/3/50 460/3/60

Product details

Gross weight	44.5 kg
Net weight	42 kg
EAN	5702428839525

Gross weight	44.5 kg
Net weight	42 kg
EAN	5702428839525

Approval standard	CE UL
Brand technique	Reciprocating compressor
Capacity control	Fixed speed
Colour	Blue
Compressor power supply [V/Ph/Hz]	400/3/50 460/3/60
Configuration code	Single
Connection type	Rotolock
Cylinder	2
Description	MT080-4
Diameter [mm]	288 mm
Discharge connection height [mm]	74 mm
Discharge connection mounting torque [Nm]	90 N-m
Discharge connection pipe size [in]	3/4 in
Discharge connection rotolock size [in]	1 1/4 in
Discharge connection size [in]	1 1/4 in
Discharge connection sleeve pipe size [in]	3/4 in
Drawing number	8502012g
Economizer	No
Factory HP [bar]	25 bar
Factory LP [bar]	25 bar
Fitting remark	(shipped with rotolock version only)
Fitting sleeve	ODF
Fitting standard	Rotolock
Frequency [Hz]	50/60
Gauge port HP	None
Gauge port LP	Schrader
Generation code	B
Glass mounting	Threaded
Glass torque [Nm]	50 N-m
GP LP torque [Nm]	15 N-m
High side max pressure (Ps)	27.8 bar
High Side TS Max	150 Â°C
High Side TS Min	-35 Â°C
High Side Volume	0.6 L
High value of nominal voltage at 50Hz [V]	400 V
High value of nominal voltage at 60Hz [V]	460 V
High value of voltage range at 50Hz [V]	460 V
High value of voltage range at 60Hz [V]	506 V
IP protection class	IP55 (with cable gland)
Low side max pressure (Ps)	18.4 bar
Low Side TS Max	50 Â°C
Low Side TS Min	-35 Â°C
Low Side Volume	16.5 L

Low value of nominal voltage at 50Hz [V]	380 V
Low value of nominal voltage at 60Hz [V]	460 V
Low value of voltage range at 50Hz [V]	340 V
Low value of voltage range at 60Hz [V]	414 V
LRA	80 A
MCC	18.5 A
Model number	MT80HP4AVE
Motor protection	Internal overload protector
Mounting torque [Nm]	15 N-m
Nominal cooling capacity 60 kBTU/h	80.2 kBtu/h
Nominal cooling capacity at 50Hz	17.8 kW
Nominal cooling capacity at 60Hz	23.5 kW
Number of starts per hour [Max]	12
Oil charge [L]	1.8 L
Oil equalization	3/8” flare SAE
Oil equalization torque [Nm]	30 N-m
Oil reference	160P
Packaging height [mm]	455 mm
Packaging length [mm]	395 mm
Packaging weight [Kg]	44 kg
Packaging width [mm]	365 mm
Packing format	Single pack
Packing quantity	1
Phase	3
Power connections	Spade
Refrigerant	R22
Refrigerant charge [kg] [Max]	5 kg
Relief valve	30 bar/8 bar
Rotational speed at 50Hz [rpm]	2900 rpm
Rotational speed at 60Hz [rpm]	3500 rpm
Segment usage	Air conditioning Refrigeration MT
Shipped fittings	Suction and discharge solder sleeves, rotolock nuts and gaskets
Shipped instructions	Installation instructions
Shipped mounting	Mounting kit with grommets, bolts, nuts, sleeves and washers
Shipped oil	Initial oil charge
Suction connection height [mm]	265 mm
Suction connection mounting torque [Nm]	110 N-m
Suction connection pipe size [in]	1 1/8 in
Suction connection rotolock size [in]	1 3/4 in
Suction connection size [in]	1 3/4 in
Suction connection sleeve pipe size [in]	1 1/8 in
Swept volume [cm3]	135.78 cm3

Technology	Reciprocating
Test dif [bar] [Max]	30 bar
Test HP [bar] [Max]	30 bar
Test LP [bar] [Max]	25 bar
Torque earth [Nm]	3 N-m
Torque power [Nm]	3 N-m
Total height [mm]	413 mm
Type	MT
Type designation	Compressor
Viscosity [cP]	32 cP
Winding resistance for three-phase compressors with identical windings [Ohm]	1.94 Ohm
Approval standard	CE UL
Brand technique	Reciprocating compressor
Capacity control	Fixed speed
Colour	Blue
Compressor power supply [V/Ph/Hz]	400/3/50 460/3/60
Configuration code	Single
Connection type	Rotolock
Cylinder	2
Description	MT080-4
Diameter [mm]	288 mm
Discharge connection height [mm]	74 mm
Discharge connection mounting torque [Nm]	90 N-m
Discharge connection pipe size [in]	3/4 in
Discharge connection rotolock size [in]	1 1/4 in
Discharge connection size [in]	1 1/4 in
Discharge connection sleeve pipe size [in]	3/4 in
Drawing number	8502012g
Economizer	No
Factory HP [bar]	25 bar
Factory LP [bar]	25 bar
Fitting remark	(shipped with rotolock version only)
Fitting sleeve	ODF
Fitting standard	Rotolock
Frequency [Hz]	50/60
Gauge port HP	None
Gauge port LP	Schrader
Generation code	B
Glass mounting	Threaded
Glass torque [Nm]	50 N-m
GP LP torque [Nm]	15 N-m
High side max pressure (Ps)	27.8 bar
High Side TS Max	150 Â°C

High Side TS Min	-35 Â°C
High Side Volume	0.6 L
High value of nominal voltage at 50Hz [V]	400 V
High value of nominal voltage at 60Hz [V]	460 V
High value of voltage range at 50Hz [V]	460 V
High value of voltage range at 60Hz [V]	506 V
IP protection class	IP55 (with cable gland)
Low side max pressure (Ps)	18.4 bar
Low Side TS Max	50 Â°C
Low Side TS Min	-35 Â°C
Low Side Volume	16.5 L
Low value of nominal voltage at 50Hz [V]	380 V
Low value of nominal voltage at 60Hz [V]	460 V
Low value of voltage range at 50Hz [V]	340 V
Low value of voltage range at 60Hz [V]	414 V
LRA	80 A
MCC	18.5 A
Model number	MT80HP4AVE
Motor protection	Internal overload protector
Mounting torque [Nm]	15 N-m
Nominal cooling capacity 60 kBTU/h	80.2 kBtu/h
Nominal cooling capacity at 50Hz	17.8 kW
Nominal cooling capacity at 60Hz	23.5 kW
Number of starts per hour [Max]	12
Oil charge [L]	1.8 L
Oil equalization	3/8” flare SAE
Oil equalization torque [Nm]	30 N-m
Oil reference	160P
Packaging height [mm]	455 mm
Packaging length [mm]	395 mm
Packaging weight [Kg]	44 kg
Packaging width [mm]	365 mm
Packing format	Single pack
Packing quantity	1
Phase	3
Power connections	Spade
Refrigerant	R22
Refrigerant charge [kg] [Max]	5 kg
Relief valve	30 bar/8 bar
Rotational speed at 50Hz [rpm]	2900 rpm
Rotational speed at 60Hz [rpm]	3500 rpm
Segment usage	Air conditioning Refrigeration MT
Shipped fittings	Suction and discharge solder sleeves, rotolock nuts and gaskets

Shipped instructions	Installation instructions
Shipped mounting	Mounting kit with grommets, bolts, nuts, sleeves and washers
Shipped oil	Initial oil charge
Suction connection height [mm]	265 mm
Suction connection mounting torque [Nm]	110 N-m
Suction connection pipe size [in]	1 1/8 in
Suction connection rotolock size [in]	1 3/4 in
Suction connection size [in]	1 3/4 in
Suction connection sleeve pipe size [in]	1 1/8 in
Swept volume [cm3]	135.78 cm3
Technology	Reciprocating
Test dif [bar] [Max]	30 bar
Test HP [bar] [Max]	30 bar
Test LP [bar] [Max]	25 bar
Torque earth [Nm]	3 N-m
Torque power [Nm]	3 N-m
Total height [mm]	413 mm
Type	MT
Type designation	Compressor
Viscosity [cP]	32 cP
Winding resistance for three-phase compressors with identical windings [Ohm]	1.94 Ohm

Private Picture Copyright : WWW.MBSM.PRO

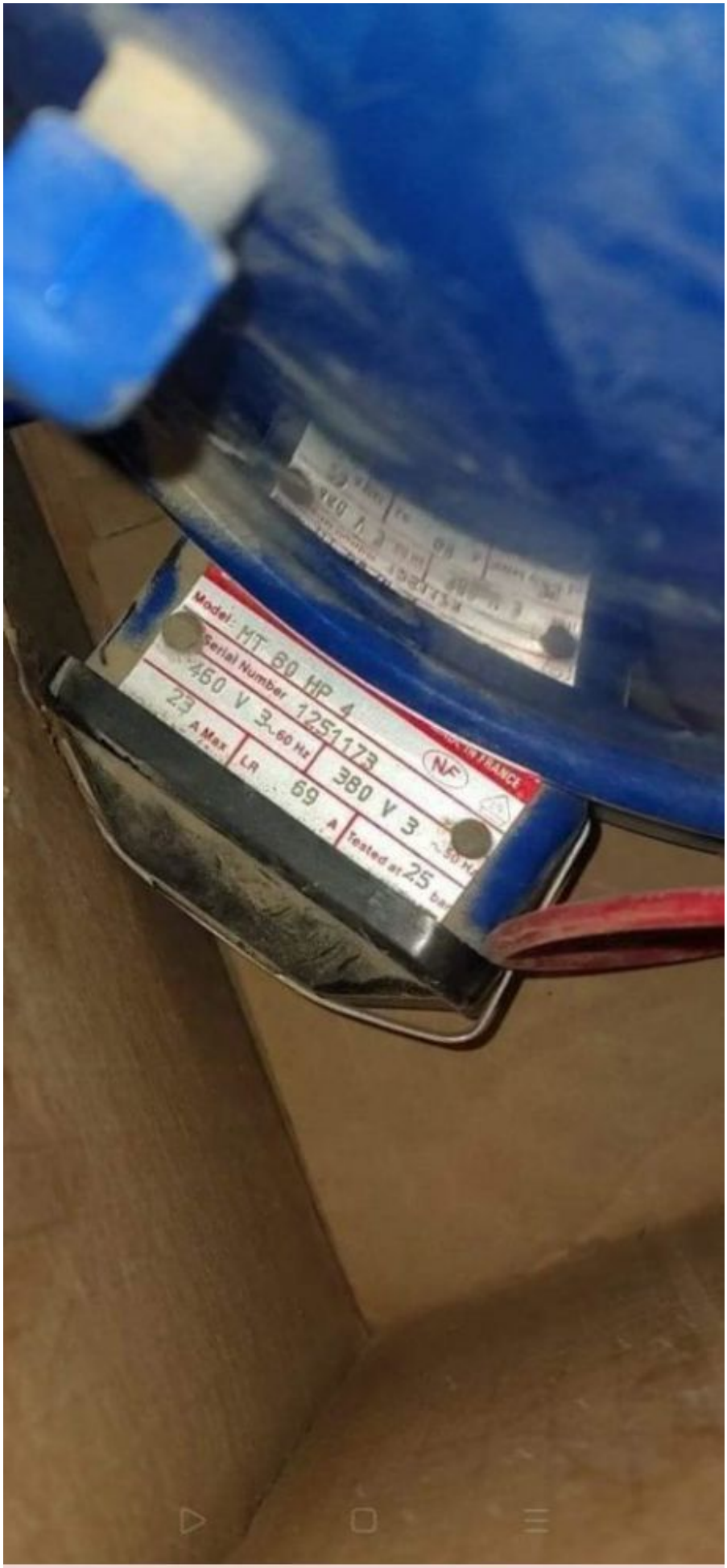

Private Picture Copyright : WWW.MBSM.PRO

Mbsm_dot_pro_private_PDF_MTZ80HP4-1Télécharger
Mbsm_dot_pro_private_PDF_MTZ80HP4Télécharger

Compresseur à piston Danfoss Maneurop MT22JC5PVE (2.0HP / 1PH) Compresseur à piston Danfoss Maneurop MT22JC4AVE (2.0HP / 3PH) Compresseur à piston Danfoss Maneurop MT28JC5PVE (2.3HP / 1PH) Compresseur à piston Danfoss Maneurop MT22JC4AVE (2.0HP / 3PH) Compresseur à piston Danfoss Maneurop MT28JC5PVE (2.3HP / 1PH) Compresseur à piston Danfoss Maneurop 3PH (2.3HP / 1PH) 2.6HP / 1PH) Compresseur à piston Danfoss Maneurop MT32JF4DVE (2.6HP / 3PH); Compresseur à piston Danfoss Maneurop MT36JG5CVE (3.0HP / 1PH) Compresseur à piston Danfoss Maneurop MT36JG4FVE (3.0HP / 3PH) Compresseur à piston Danfoss Maneurop MT40JH4EVE (3.3HP / 3PH) Danfoss Maneurop Compresseur à piston MT36JG4FVE (3.0HP / 3PH) Compresseur à piston Danfoss Maneurop MT40JH4EVE (3.3HP / 3PH) Danfoss Maneurop Compresseur à piston MT36JG4FVE (3.0HP / 3PH) Compresseur à piston Danfoss Maneurop MT40JH4EVE (3.3HP / 3PH) Compresseur à piston Danfoss Maneurop 3KFHB4 (3.6PH) 4.0HP / 3PH) Compresseur à piston Danfoss Maneurop MT56HL4BVE (4. 6HP / 3PH) Compresseur à piston Danfoss Maneurop MT64HM4DVE (5.3HP / 3PH) Compresseur à piston Danfoss Maneurop MT72HN4AVE (6.0HP / 3PH) Compresseur à piston Danfoss Maneurop MT80HP4AVE (6.6HP / 3PH) Compresseur à piston Danfoss Maneurop MT72HN4AVE (6.0HP / 3PH) Compresseur à piston Danfoss Maneurop MT80HP4AVE (6.6HP / 3PH) Compresseur à piston Danfoss Maneurop4.0 Compresseur à piston MT144HV4AVE (12,0HP / 3PH) Compresseur à piston Danfoss Maneurop MT160HW4EVE (13.3HP / 3PH) Compresseur à piston Danfoss Maneurop MTZ22JC5VE (2.0HP / 1PH); [R134A, R404] Compresseur à piston Danfoss Maneurop MTZ22JC4AVE

(2.0HP / 3PH); [R134A, R404] Compresseur à piston Danfoss Maneurop MTZ28JE5AVE (2,3 HP / 1PH); [R134A, R404] Compresseur à piston Danfoss Maneurop MTZ28JE4AVE (2,3 HP / 3PH); [R134A, R404] Compresseur à piston Danfoss Maneurop MTZ32JF5AVE (2,6 CV / 1PH); [R134A, R404] Compresseur à piston Danfoss Maneurop MTZ32JF4BVE (2.6HP / 3PH); [R134A, R404] Compresseur à piston Danfoss Maneurop MTZ36JG5AVE (3.0HP / 1PH); [R134A, R404] Compresseur à piston Danfoss Maneurop MTZ36JG4BVE (3.0HP / 3PH); [R134A, R404] Compresseur à piston Danfoss Maneurop MTZ40JH4AVE (3,3 CV / 3PH); [R134A, R404] Compresseur à piston Danfoss Maneurop MTZ50HK4CVE (4,0 CV / 3PH); [R134A, R404] Compresseur à piston Danfoss Maneurop MTZ56HL4BVE (4,6 CV / 3PH); [R134A, R404] Compresseur à piston Danfoss Maneurop MTZ64HM4CVE (5,3 HP / 3PH); [R134A, R404] Compresseur à piston Danfoss Maneurop MTZ72HN4AVE (6,0 CV / 3PH); [R134A, R404] Compresseur à piston Danfoss Maneurop MTZ80HP4AVE (6,6 CV / 3PH); [R134A, R404] Compresseur à piston Danfoss Maneurop MTZ100HS4VE (8,3 CV / 3 PH); [R134A, R404] Compresseur à piston Danfoss Maneurop MTZ125HU4VE (10.0HP / 3PH); [R134A, R404] Compresseur à piston Danfoss Maneurop MTZ144HV4AVE (12,0 HP / 3PH); [R134A, R404] Compresseur à piston Danfoss Maneurop MTZ160HE4AVE (13,3 HP / 3PH); [R134A, R404] Compresseur à piston Danfoss Maneurop NTZ048A4LR1A (2.0HP / 3PH); [R134A, R404, R507] Compresseur à piston Danfoss Maneurop NTZ068A4LR1A (3,5 CV / 3PH); [R134A, R404, R507] Compresseur à piston Danfoss Maneurop NTZ096A4LR1A (4,5 CV / 3PH); [R134A, R404, R507] Compresseur à piston Danfoss Maneurop NTZ108A4LR1A (5,0 CV / 3PH); [R134A, R404, R507] Compresseur à piston Danfoss Maneurop NTZ136A4LR1A (6,5 CV / 3PH); [R134A, R404, R507] Compresseur à piston Danfoss Maneurop NTZ215A4LR1A (10,0 HP / 3PH); [R134A, R404, R507] Compresseur à piston Danfoss Maneurop NTZ271A4LR1A (13.0HP / 3PH); [R134A, R404, R507] COMPRESSEUR MANEUROP 2.0HP MT22 MANEUROPE 2.0HP MT22 COMPRESSEUR MANEUROP COMPRESSEUR MTZ-22JE-4VE R404A MANEUROPE 2.30HP MT28JE-5PVE MT28-5VI / MT28-5VM COMPRESSEUR MANEUROP 2.30HP MT28JE-5PVE MT28-5VI / MT28-5VM COMPRESSEUR MANEUROPEUR 2.30H5 / R404A) COMPRESSEUR MANEUROP 2.8HP MTZ32-5VM (R134a / R404A / R507) COMPRESSEUR MANEUROP MT32JF5MVE 2-3 / 4HP ((R22) COMPRESSEUR MANEUROP 3.0HP MT36JG4FVE (MT36-4VI / MT36-4VM) (R22) COMPRESSEUR 3.0HP COMPRESSEUR MT36 MANEUROP 3.3HP MT40JH4EVE COMPRESSEUR MANEUROP 3.3HP MTZ40-JH4AVE COMPRESSEUR (R407A / C / F / R134A / R404A / R507) Compresseur MANEUROP MTZ-36-JG4AVE (R407C / R134a / R404A-R407C / R134a / R404A) -Compresseur JH4AVE (R134a / R404A) – Compresseur 3.3HP 3PH MANEUROP MTZ-44-HJ4AVE (R134a / R404A) – 3. 5HP 3PH MANEUROP 4HP MTZ-50HK-4CVE (MTZ50-4VI / MTZ50-4VM) COMPRESSEUR (R134A / R404A) MANEUROP MTZ56HL3BVE R407c, R134a, R507a, R404a compresseur MANEUROP MT-64-4VM COMPRESSEUR MANEUR 64-4VM COMPRESSEUR MANEUR COMPRESSEUR MT72-4VM COMPRESSEUR MANEUROP MT-80-4VM (6.5HP) Compresseur MANEUROP 6.6HP MT81HP4AVE COMPRESSEUR MANEUROP MTZ80HM4DVE COMPRESSEUR MANEUROP 8.5HP MT100-4VM COMPRESSEUR MANEUROPE 10HP MT100-4VM (MT100HS4DVE) COMPRESSEUR 10HP MT100-4VM (MT100HS4DVE) COMPRESSEUR MT12M10 MANHOP 4-COMPRESSEUR 10HP R22) COMPRESSEUR MANEUROP 10HP MTZ125HW4AVE (R404A / R134A / R507 / R407C) COMPRESSEUR MANEUROPE 12HP MT144-4VM COMPRESSEUR MANEUROPE 13.3HP MT160-4VM (MT160HW4DVE) COMPRESSEUR MANZVMER 10 COMPRESSEUR MANZVM4 (MT160HW4DVE) / 2 ‘) SER. KIT POUR MT-28 MANEUROP 7703009 (1-1 / 8 ‘& 3/4’) SER.